higher education & training

Department:
Higher Education and Training
REPUBLIC OF SOUTH AFRICA

T1370**(E)**(A4)T

NATIONAL CERTIFICATE

PLUMBING THEORY N1

(11022041)

4 April 2019 (X-Paper)
09:00–12:00

This question paper consists of 5 pages.

Copyright reserved

DEPARTMENT OF HIGHER EDUCATION AND TRAINING
REPUBLIC OF SOUTH AFRICA

NATIONAL CERTIFICATE
PLUMBING THEORY N1
TIME: 3 HOURS
MARKS: 100

INSTRUCTIONS AND INFORMATION

1. Answer ALL the questions.
2. Read ALL the questions carefully.
3. Number the answers according to the numbering system used in this question paper.
4. Sketches must be large, neat and fully labelled.
5. Write neatly and legibly.

Copyright reserved

QUESTION 1: SAFETY AND HOUSEKEEPING

1.1 State THREE safety precautions when ascending or descending a ladder. (3)

1.2 Why should openings or excavation on sloping or level ground be safeguarded? (2)

[5]

QUESTION 2: TOOLS AND MACHINES

2.1 Give the uses of each of the following tools:

2.1.1 Wooden mallet

2.1.2 Ball-pein hammer

2.1.3 Solid punches

(3 × 1) (3)

2.2 Name THREE tools a plumber can use to repair and install pipework. (3)

2.3 State FOUR safety precautions when using a grinding machine. (4)

[10]

QUESTION 3: METALS AND MATERIALS

3.1 Define each of the following properties of metals:

3.1.1 Ductility

3.1.2 Fusibility

3.1.3 Malleability

(3 × 2) (6)

3.2 Name TWO types of corrosion a plumber should be aware of. (2)

[8]

QUESTION 4: SOLDERING AND WELDING

4.1 Make clear, labelled drawings of each of the following:

4.1.1 Oxidising flame

4.1.2 Carbonising flame

4.1.3 Neutral flame

(3 × 2) (6)

4.2 Explain the term *brazing (hard soldering)*. (2)

[8]

Copyright reserved

QUESTION 5: COLD-WATER SUPPLY

5.1 State the minimum and maximum depth of underground-water service mains. (2)

5.2 Name and explain TWO methods of joining copper pipes. (2 × 2) (4)

5.3 Why do we use hemp or thread tape on threads of galvanised steel pipes? (1)

5.4 Make a labelled freehand sketch to illustrate a bib tap. (10)

[17]

QUESTION 6: HOT-WATER SUPPLY

6.1 Give FOUR advantages of a push-through geyser. (4)

6.2 What is the purpose of vacuum breakers in a geyser installation? (2)

6.3 Pipes expand and contract due to temperature changes.

Name TWO methods that allow for the expansion and contraction of pipes. (2)

6.4 Differentiate between each of the following terms:

6.4.1 Solar energy

6.4.2 Radiant energy

(2 × 2) (4)

[12]

QUESTION 7: DRAINAGE

7.1 Name THREE types of water seal traps commonly used in plumbing. (3)

7.2 Explain each of the following drainage terms:

7.2.1 Waste water

7.2.2 Septic tank

7.2.3 French drain

(3 × 2) (6)

Copyright reserved

7.3 Below is a water-closet flushing cistern.

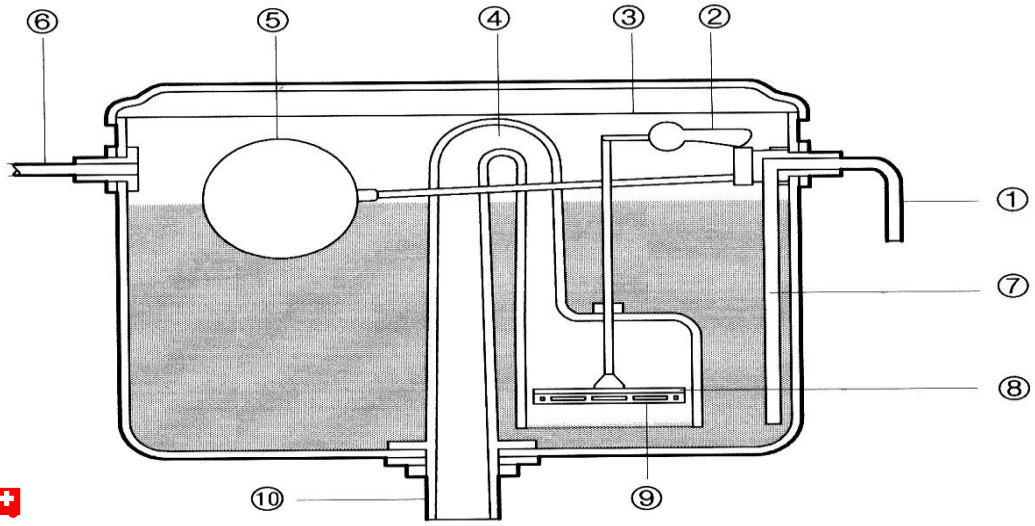

Label the components of the cistern by writing only the answer next to the number (1–10) in the ANSWER BOOK. (10 × 1) (10)

7.4 What is the maximum required height when installing a wash hand basin? (1)
[20]

QUESTION 8: SHEET-METAL WORK

Draw a reasonable, labelled sketch to show how to fix a parapet box gutter on a parapet wall with a pitch roof. **[12]**

QUESTION 9: CALCULATIONS

A mild-steel sheet has a length of 3 metres and a width of 2,5 metres.

Calculate:

9.1 The circumference of the sheet (5)

9.2 The area of the sheet (3)
[8]

TOTAL: 100

Copyright reserved