higher education & training

Department:
Higher Education and Training
REPUBLIC OF SOUTH AFRICA

T1360**(E)**(A8)T

NATIONAL CERTIFICATE

PLATING AND STRUCTURAL STEEL DRAWING N4

(8090124)

8 August 2019 (X-Paper)
09:00–13:00

REQUIREMENTS: ONE A2 drawing sheet

Calculators may be used.

This question paper consists of 5 pages, 1 answer sheet and 2 diagram sheets.

Copyright reserved

DEPARTMENT OF HIGHER EDUCATION AND TRAINING
REPUBLIC OF SOUTH AFRICA

NATIONAL CERTIFICATE
PLATING AND STRUCTURAL STEEL DRAWING N4
TIME: 4 HOURS
MARKS: 100

NOTE: If you answer more than the required number of questions only the required number will be marked. Clearly cross out ALL work you do NOT want to be marked.

INSTRUCTIONS AND INFORMATION

1. Answer any FOUR questions.
2. Read ALL the questions carefully.
3. Number the answers according to the numbering system used in this question paper.
4. Show ALL calculations on the DRAWING SHEET.
5. Insert dimensions, a title and the scale on each drawing.
6. Answer TWO questions on the front and TWO questions on the reverse side of the DRAWING SHEET.
7. Use only ONE DRAWING SHEET.
8. Work neatly.

Copyright reserved

QUESTION 1

FIGURE 1, DIAGRAM SHEET 1 (attached), shows the front and left views of a Y-piece inclined at the joint. The Y-piece will be used as part of the ducting in a dust-extraction plant at a cigarette-manufacturing factory.

Draw, to scale 1:10, the following views:

1.1 The TWO given views

1.2 The projection of the top view

HINT: Use the measurement only in the left view to project the top view.

1.3 An auxiliary view showing the joint lines between pipes A, B and C

NOTE: Branch A need NOT be drawn in this view – show only the joint lines of branch B to branch A and to pipe C.

1.4 The pattern of pipe B – the joint of the pattern is at X-X

The completed drawing must clearly indicate ALL construction lines. The following title and scale must be printed centred beneath the completed drawing:

Y-PIECE INCLINED AT THE JOINT
SCALE 1:10 **[25]**

QUESTION 2

FIGURE 2, DIAGRAM SHEET 1 (attached), shows the front and top views of a rectangle-to-round transition piece. The transition piece will be used as a reducer on a machine to connect a stainless-steel pipe in a dairy.

2.1 Draw the given views (NOT to scale).

2.2 Calculate the true lengths to develop the half pattern of the transition piece. Write the true lengths on the ANSWER SHEET (attached).

2.3 Use the calculated true lengths and develop, to scale 1:1, the half pattern of the transition piece. The joints of the transition piece are shown at F6 and D0.

NOTE: Marks will NOT be awarded for lengths taken from the drawing to scale.

The completed drawing must clearly indicate ALL construction lines. The following title and scale must be printed centred beneath the completed drawing:

RECTANGLE-TO-ROUND TRANSITION PIECE
SCALE 1:1 **[25]**

Copyright reserved

QUESTION 3

FIGURE 3, DIAGRAM SHEET 1 (attached), shows the front and top views of a feed hopper. The hopper will be used to feed coal into a huge coal bunker at a power station.

Draw, to scale 1:10, the following views:

3.1 The given views

3.2 The half pattern of the feed hopper – the joints of the half pattern are shown at X-X and Y-Y.

The completed drawing must clearly indicate ALL construction lines. The following title and scale must be printed centred beneath the completed drawing:

FEED HOPPER
SCALE 1:10 **[25]**

QUESTION 4

FIGURE 4, DIAGRAM SHEET 2 (attached), shows the front, left and top views of a transition piece which will fit on a section of square ducting. The transition piece and square ducting will be part of the ventilation system of a shopping mall.

Draw, to scale 1:10, the following views:

4.1 The given views

4.2 The patterns of ALL side pieces of the transition piece

The completed drawing must clearly indicate ALL construction lines. The following title and scale must be printed centred beneath the completed drawing:

TRANSITION PIECE
SCALE 1:10 **[25]**

Copyright reserved

QUESTION 5

FIGURE 5, DIAGRAM SHEET 2 (attached), shows the front view of a right conic connection to a conical cover. The conical cover with the right conic connection fits on a tank in a beverage company.

Draw, to scale 1:10, the following views:

5.1 The given front view

5.2 A full top view of the conical cover with the right conic connection

5.3 The interpenetration lines between the conical cover and the right conic connection in the front and top views

5.4 The pattern of the 190 mm right conic connection A – the joint of the pattern is shown at X-X

5.5 The shape of the hole in the conical cover

The completed drawing must clearly indicate ALL construction lines. The following title and scale must be printed centred beneath the completed drawing:

RIGHT CONIC CONNECTION
SCALE 1:10

[25]

TOTAL: 100

Copyright reserved

ANSWER SHEET EXAMINATION NUMBER: | | | | | | | | | | | | | |

Do the calculations on the DRAWING SHEET and write only the answers on this ANSWER SHEET. Submit this table together with the DRAWING SHEET.

CALCULATE	TRUE LENGTH	MARKS
Arc length 1/12		1
C0		1
C1		1½
C2		1½
C3		1
B3		1
B4		1½
B5		1½
B6		1
D0		1
F6		1
CD & BF		1
BC & AE		1
TOTAL		**15**

Copyright reserved

DIAGRAM SHEET 1

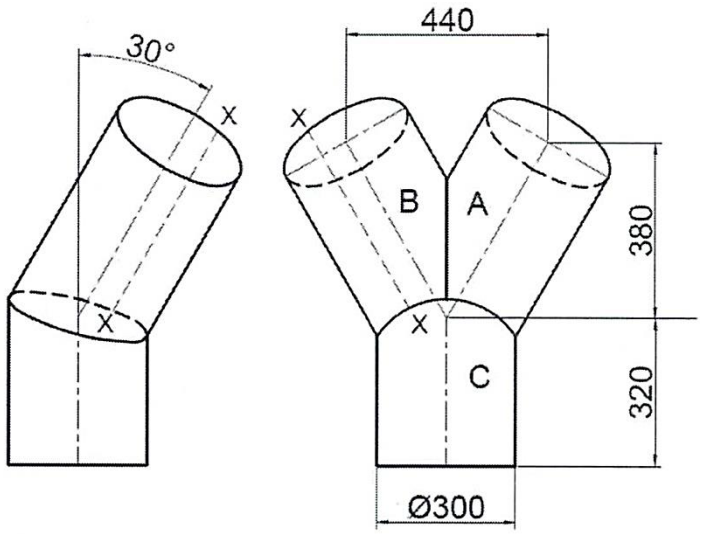

FIGURE 1

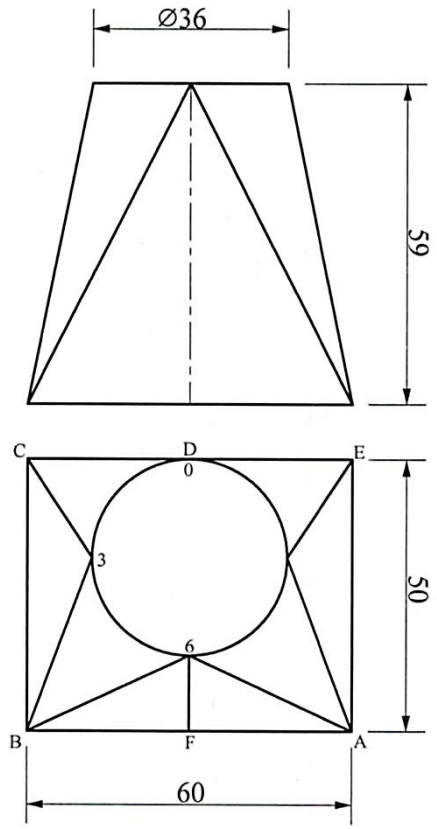

FIGURE 2

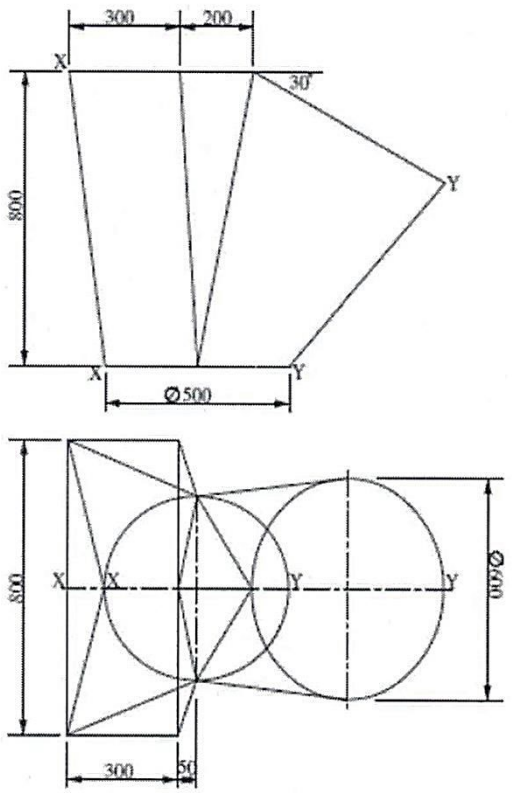

FIGURE 3

Copyright reserved

DIAGRAM SHEET 2

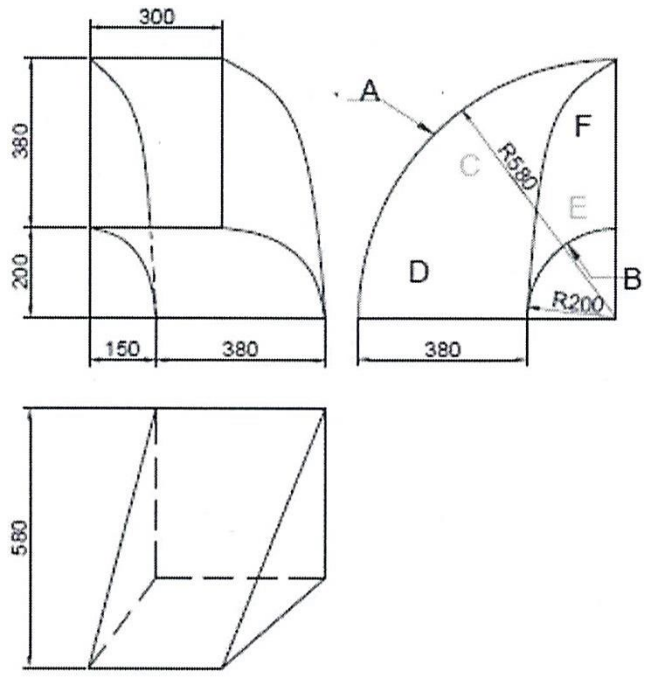

FIGURE 4

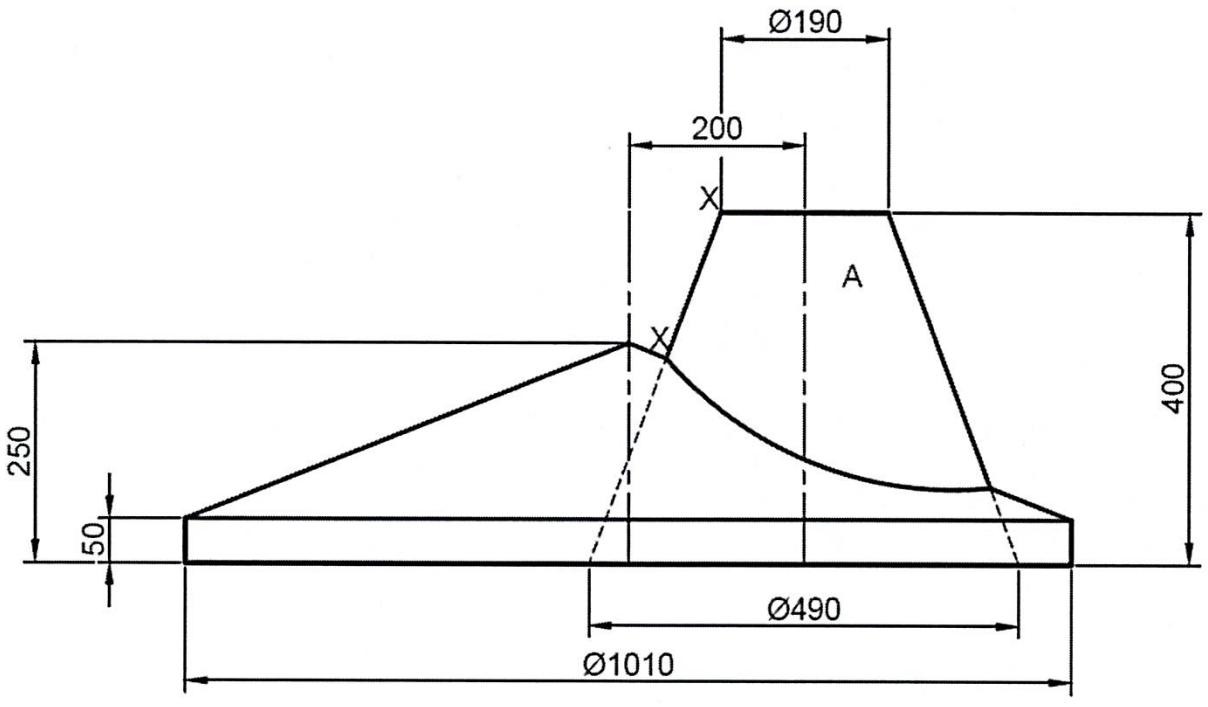

FIGURE 5

Copyright reserved