higher education & training

Department:
Higher Education and Training
REPUBLIC OF SOUTH AFRICA

T1360**(E)**(A3)T

NATIONAL CERTIFICATE

PLATING AND STRUCTURAL STEEL DRAWING N4

(8090124)

3 August 2018 (X-Paper)
09:00–13:00

REQUIREMENTS: ONE A2 drawing sheet

Calculators may be used.

This question paper consists of 5 pages, 1 answer sheet and 2 diagram sheets.

Copyright reserved

DEPARTMENT OF HIGHER EDUCATION AND TRAINING
REPUBLIC OF SOUTH AFRICA

NATIONAL CERTIFICATE
PLATING AND STRUCTURAL STEEL DRAWING N4
TIME: 4 HOURS
MARKS: 100

NOTE : If you answer more than the required number of questions only the required number will be marked. ALL work you do not want to be marked must be clearly crossed out.

INSTRUCTIONS AND INFORMATION

1. Answer any FOUR questions.
2. Read ALL the questions carefully.
3. Number the answers according to the numbering system used in this question paper.
4. Show ALL calculations on the DRAWING SHEET.
5. Insert dimensions, a title and the scale on each drawing.
6. Answer TWO questions on the front and TWO questions on the reverse side of the DRAWING SHEET.
7. Only ONE A2 DRAWING SHEET may be used.
8. Write neatly and legibly.

Copyright reserved

QUESTION 1

FIGURE 1, DIAGRAM SHEET 1 (attached), shows the front and top views of a rectangle-to-round transformer with a sloping base. The transformer will be used as a connecting piece to fit a stainless-steel pipe to a fruit juice-processing machine.

1.1 Draw the given views (not to scale).

1.2 Calculate the true lengths to develop the half-pattern of the transformer. Write the true lengths on the ANSWER SHEET.

1.3 Use the calculated true lengths and develop, to scale 1 : 1, the half-pattern of the transformer. The joints of the transformer are shown at X-0 and A-6.

NOTE: No marks will be awarded for lengths taken from the drawing to scale.

The completed drawing must clearly indicate ALL construction lines. The following title and scale must be printed centred below the completed drawing:

RECTANGULAR-TO-CIRCULAR TRANSFORMER
SCALE 1 : 1 **[25]**

QUESTION 2

FIGURE 2, DIAGRAM SHEET 1 (attached), shows the front and left views of a right conical cover intersected by a rectangular prism with semicircular sides. The conical cover will be used on a wine tank in a winery.

Draw, to scale 1 : 5:

2.1 The left view

2.2 The top view of the conical cover below the left view in QUESTION 2.1

2.3 The line of penetration between the right conical cover and the sight screen holder in the left view and the top view

2.4 The half-pattern of the right cone with the shape of the hole for the sight screen holder (the joint of the pattern is shown at X–X)

The completed drawing must clearly indicate ALL construction lines. The following title and scale must be printed centred below the completed drawing:

CONICAL COVER WITH SIGHT SCREEN HOLDER
SCALE 1 : 5 **[25]**

Copyright reserved

QUESTION 3

FIGURE 3, DIAGRAM SHEET 1 (attached), shows the front and top views of a ventilator head. The ventilator head fits on a square duct that will be used as part of a dust-extraction plant at a furniture-manufacturing company.

Draw, to scale 1 : 5:

3.1 The given views

3.2 The top view

3.3 The patterns of the plates A, B and C to form the ventilator head

The completed drawing must clearly indicate ALL construction lines. The following title and scale must be printed centred below the completed drawing:

VENTILATOR HEAD
SCALE 1 : 5 **[25]**

QUESTION 4

FIGURE 4, DIAGRAM SHEET 2 (attached), shows the front and top views of an off-centre oblique conical hopper. The conical hopper will be part of the ventilation system of a welding workshop.

Draw, to scale 1 : 20:

4.1 The given views

4.2 The pattern of the right-hand leg of the conical hopper (the joint of the pattern is shown at X–X)

The completed drawing must clearly indicate ALL construction lines. The following title and scale must be printed centred below the completed drawing:

OBLIQUE CONICAL HOPPER
SCALE 1 : 20 **[25]**

Copyright reserved

QUESTION 5

FIGURE 5, DIAGRAM SHEET 2 (attached), shows the front and top views of a straight-back junction piece. The junction piece will be used as part of the ducting of an air-conditioning plant in a multistorey building.

Draw, to scale 1 : 10:

5.1 The given views

5.2 The half-pattern of the junction piece (the joints of the junction piece are shown at X–Y and M–N)

The completed drawing must clearly indicate ALL construction lines. The following title and scale must be printed centred below the completed drawing:

STRAIGHT-BACK JUNCTION PIECE
SCALE 1 : 10

[25]

TOTAL: 100

Copyright reserved

ANSWER SHEET **EXAMINATION NUMBER**

This table must be handed in together with the DRAWING SHEET.

The calculations must be done on the DRAWING SHEET.

CALCULATE	TRUE LENGTH	%
Arc length 1/12		1
D0		1
D1		2
D2		2
D3		1
E3		1
E4		2
E5		2
E6		1
A6		1
X0		1
DE		1
TOTAL:		**16**

Copyright reserved

DIAGRAM SHEET 1

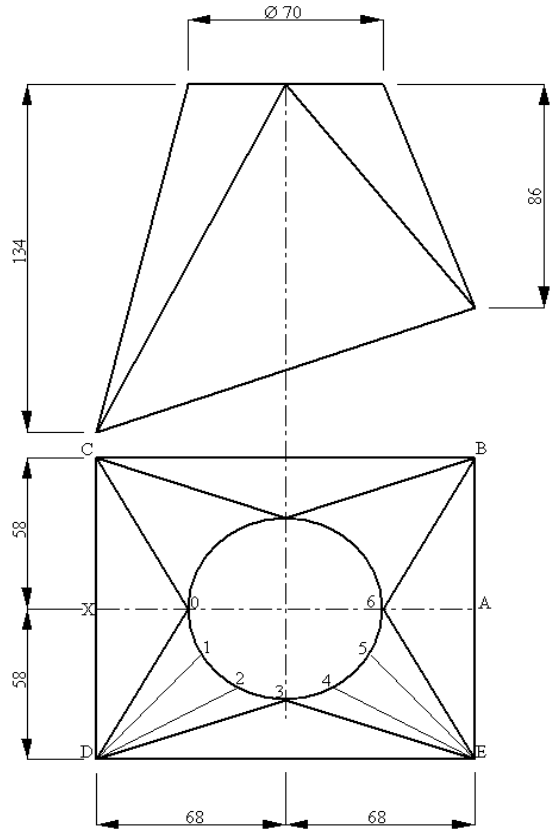

FIGURE 1

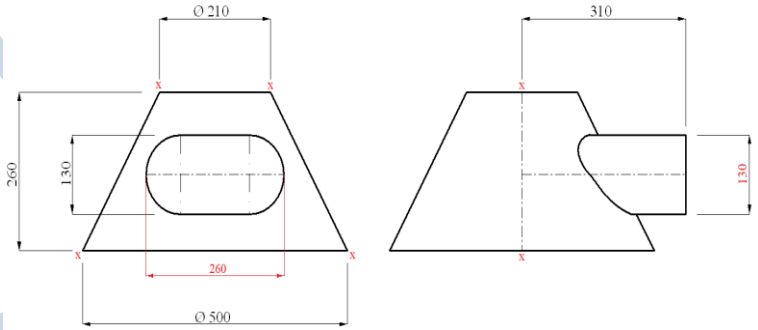

FIGURE 2

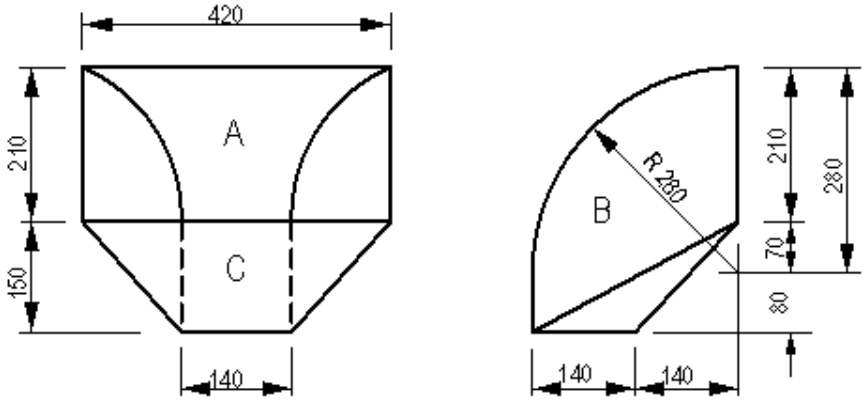

FIGURE 3

DIAGRAM SHEET 2

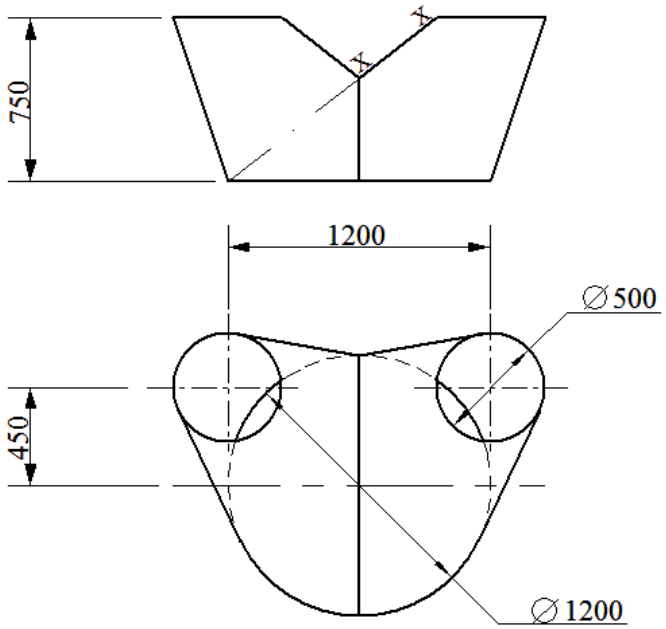

FIGURE 4

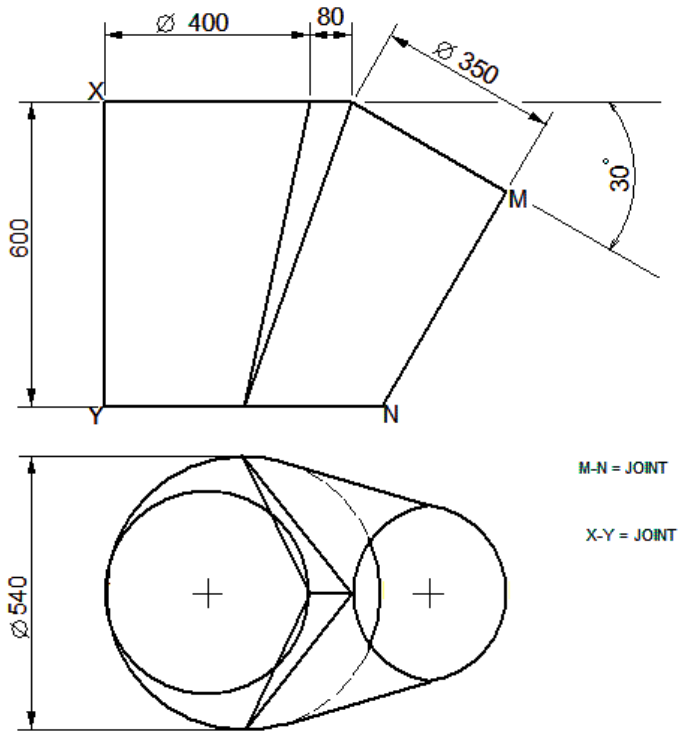

FIGURE 5

Copyright reserved