higher education & training

Department:
Higher Education and Training
REPUBLIC OF SOUTH AFRICA

MARKING GUIDELINE

NATIONAL CERTIFICATE

PLATING AND STRUCTURAL STEEL DRAWING N4

3 AUGUST 2018

This marking guideline consists of 10 pages.

Copyright reserved

QUESTION 1: RECTANGULAR-TO-CIRCULAR TRANSFORMER

Front view (not to scale)	1
Top view (not to scale)	1
Calculations	16
Half-pattern of transformer	5
Accuracy	1
Neatness	1
TOTAL:	**[25]**

QUESTION 2: CONICAL COVER WITH SIGHT SCREEN HOLDER

Front view without penetration curve	3
Top view without penetration curve	2
Penetration curve in top view	4
Penetration curve in front view	3
Pattern of cone with hole for sight screen holder	9
Accuracy	1
Line work and projections	2
Neatness	1
TOTAL:	**[25]**

QUESTION 3: VENTILATOR HEAD

Front view	5
Top view	2
Left view	3
Pattern of plate A	3
Pattern of plate B	6
Pattern of plate C	2
Accuracy	1
Line work and projections	2
Neatness	1
TOTAL:	**[25]**

QUESTION 4: OBLIQUE CONICAL HOPPER

Front view without line of penetration	3
Construction of line of penetration	4
Shape of hole in main pipe	5
Pattern of the cone	10
Accuracy	1
Line work and projections	1
Neatness	1
TOTAL:	**[25]**

Copyright reserved

QUESTION 5: STRAIGHT-BACK JUNCTION PIECE

Front view	3
Top view	5
Pattern of the hopper	13
Accuracy	1
Line work and projections	2
Neatness	1
TOTAL:	**[25]**

Copyright reserved

QUESTION 1

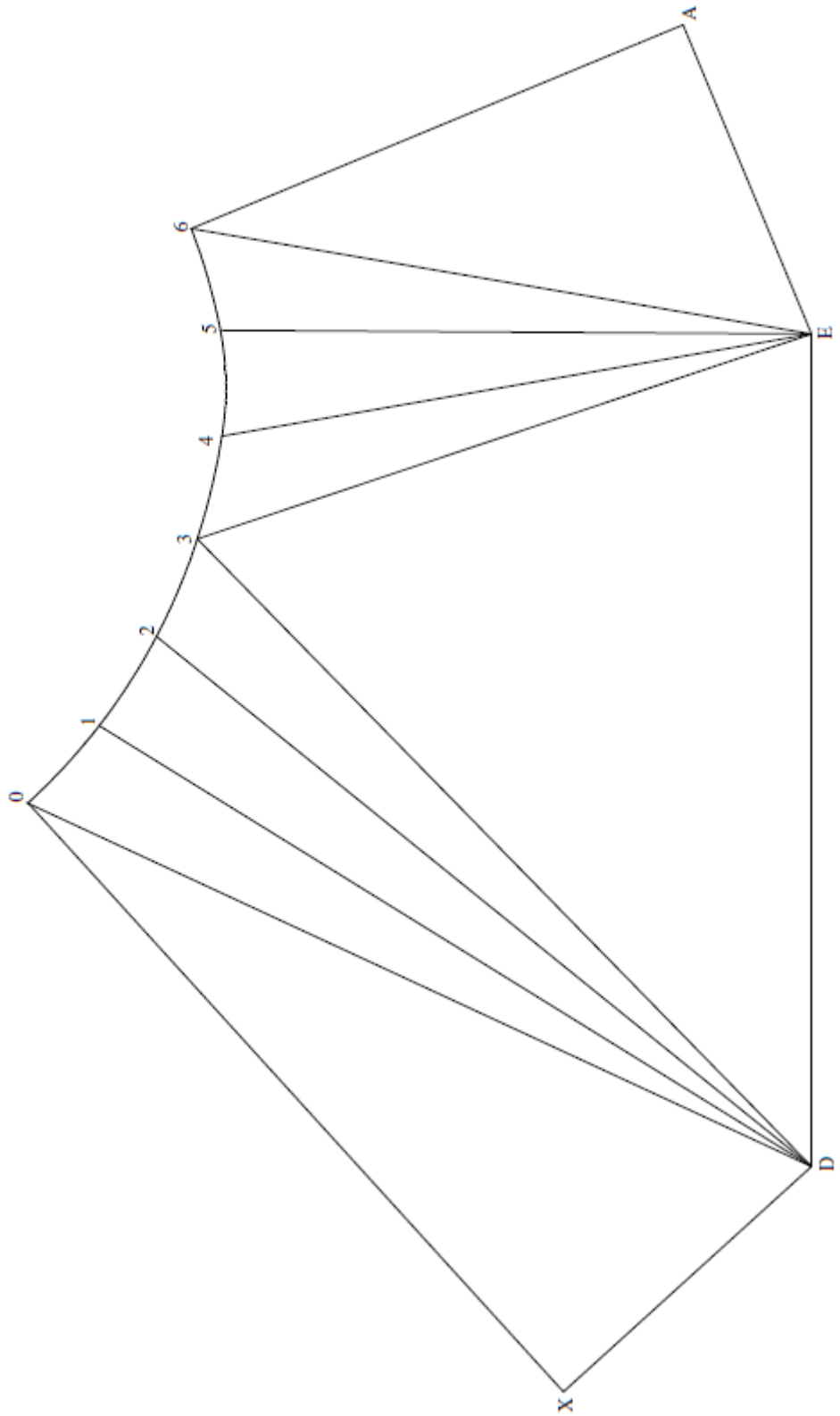

RECTANGULAR-TO-CIRCULAR TRANSFORMER
SCALE 1 : 1

(9)

DIAGRAMS AND CALCULATIONS

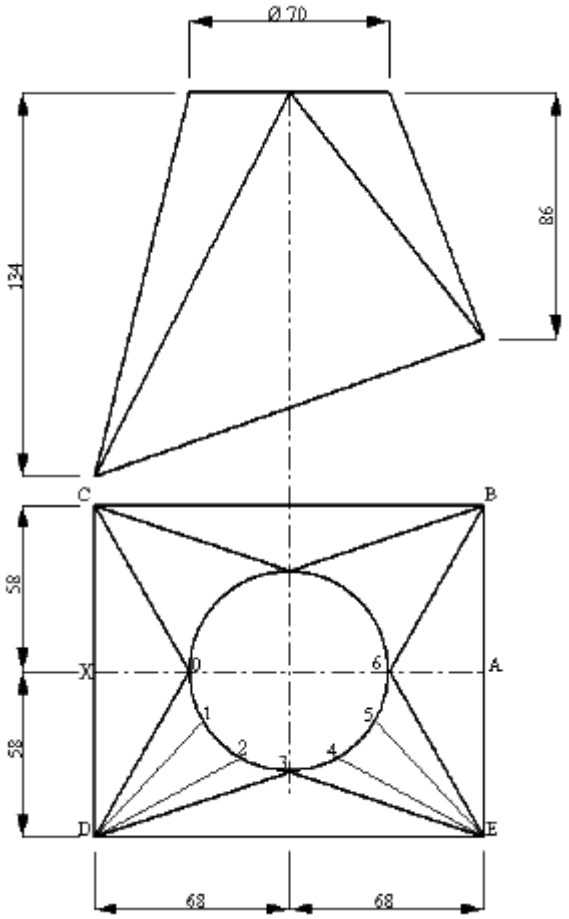

$Circle\ divisions: 1-2; 2-3 \ldots etc = \frac{\pi \times 70}{12} = 18.33$ (1)

$DO = \sqrt{(68-35)^2 + 58^2 + 134^2} = 149.7$ (1)

$D1 = \sqrt{(68 - 35Cos30°)^2 + (58 - 35Sin30°)^2 + 134^2} = 144.97$ (2)

$D2 = \sqrt{(68 - 35Cos60°)^2 + (58 - 35Sin60°)^2 + 134^2} = 145.85$ (2)

$D3 = \sqrt{(58-35)^2 + 68^2 + 134^2} = 152.02$ (1)

$E3 = \sqrt{68^2 + (58-35)^2 + 86^2} = 112.02$ (1)

$E4 = \sqrt{(68 - 35Cos60°)^2 + (58 - 35Sin60°)^2 + 86^2} = 103.50$ (2)

$E5 = \sqrt{(68 - 35Cos30°)^2 + (58 - 35Sin30°)^2 + 86^2} = 102.26$ (2)

$E6 = \sqrt{(68-35)^2 + 58^2 + 86^2} = 108.85$ (1)

$A6 = \sqrt{(68-35)^2 + 86^2} = 92.11$ (1)

$XO = \sqrt{(68-35)^2 + 134^2} = 138.00$ (1)

$DE = \sqrt{(134-86)^2 + (68+68)^2} = 144.22$ (1)

[25]

QUESTION 2

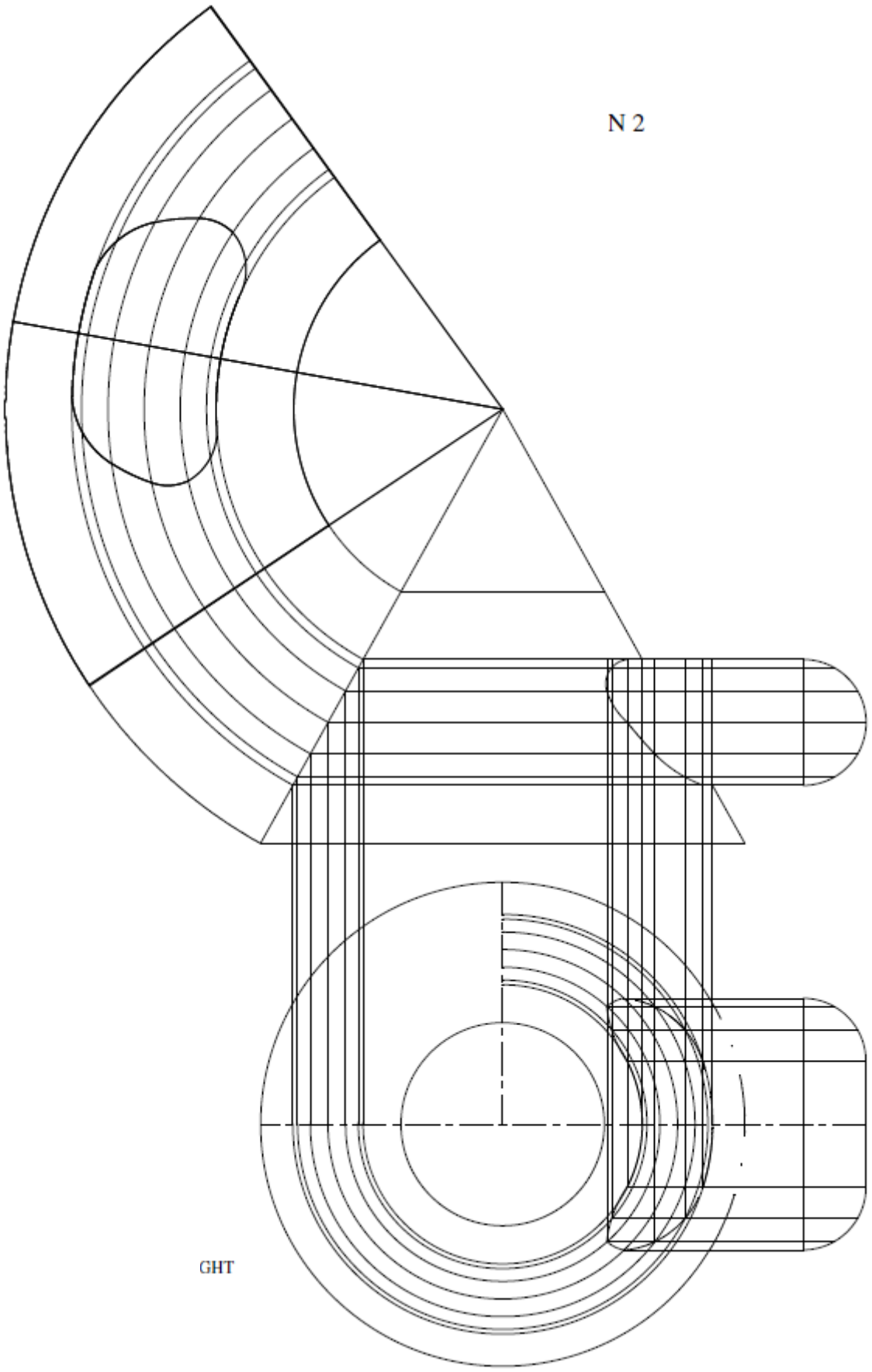

CONICAL COVER WITH SIGHT SCREEN HOLDER
SCALE 1 : 5

[25]

Copyright reserved

QUESTION 3

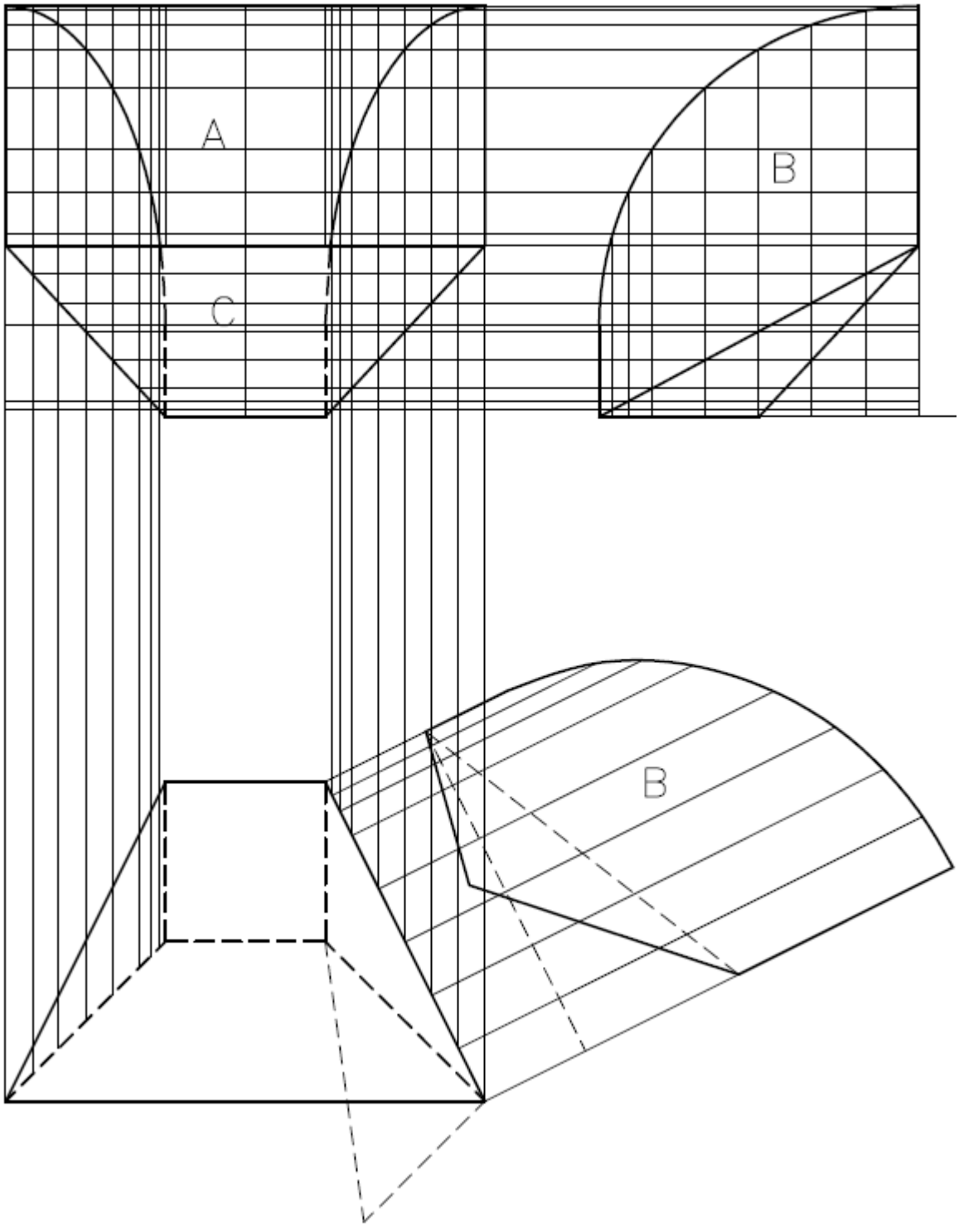

VENTILATOR HEAD
SCALE 1 : 5

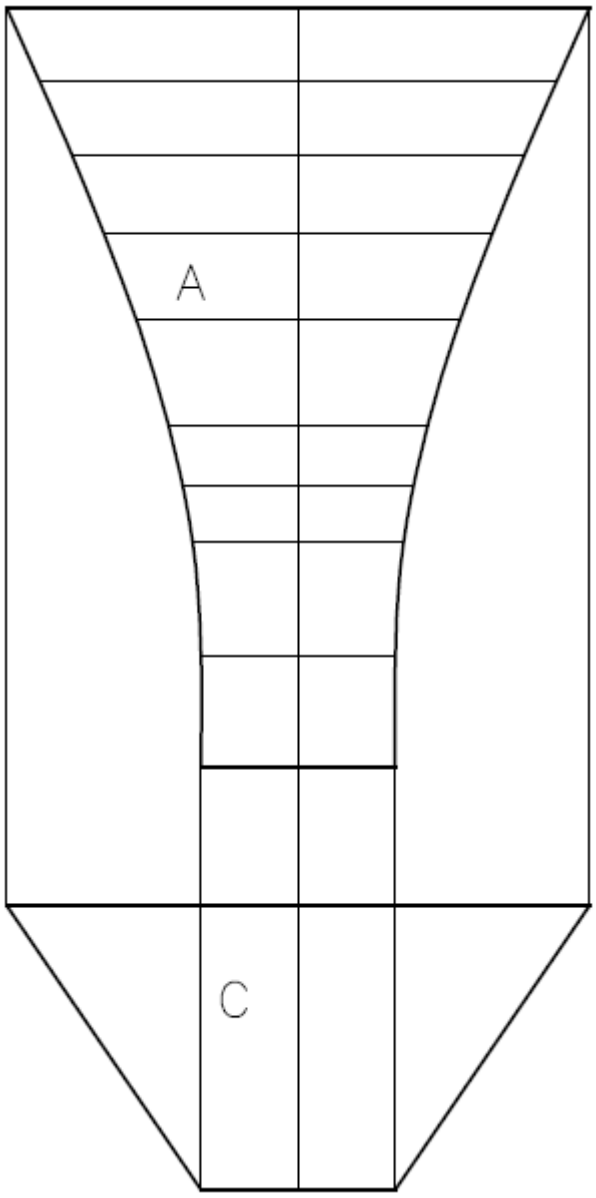

VENTILATOR HEAD
SCALE 1 : 5

[25]

Copyright reserved

QUESTION 4

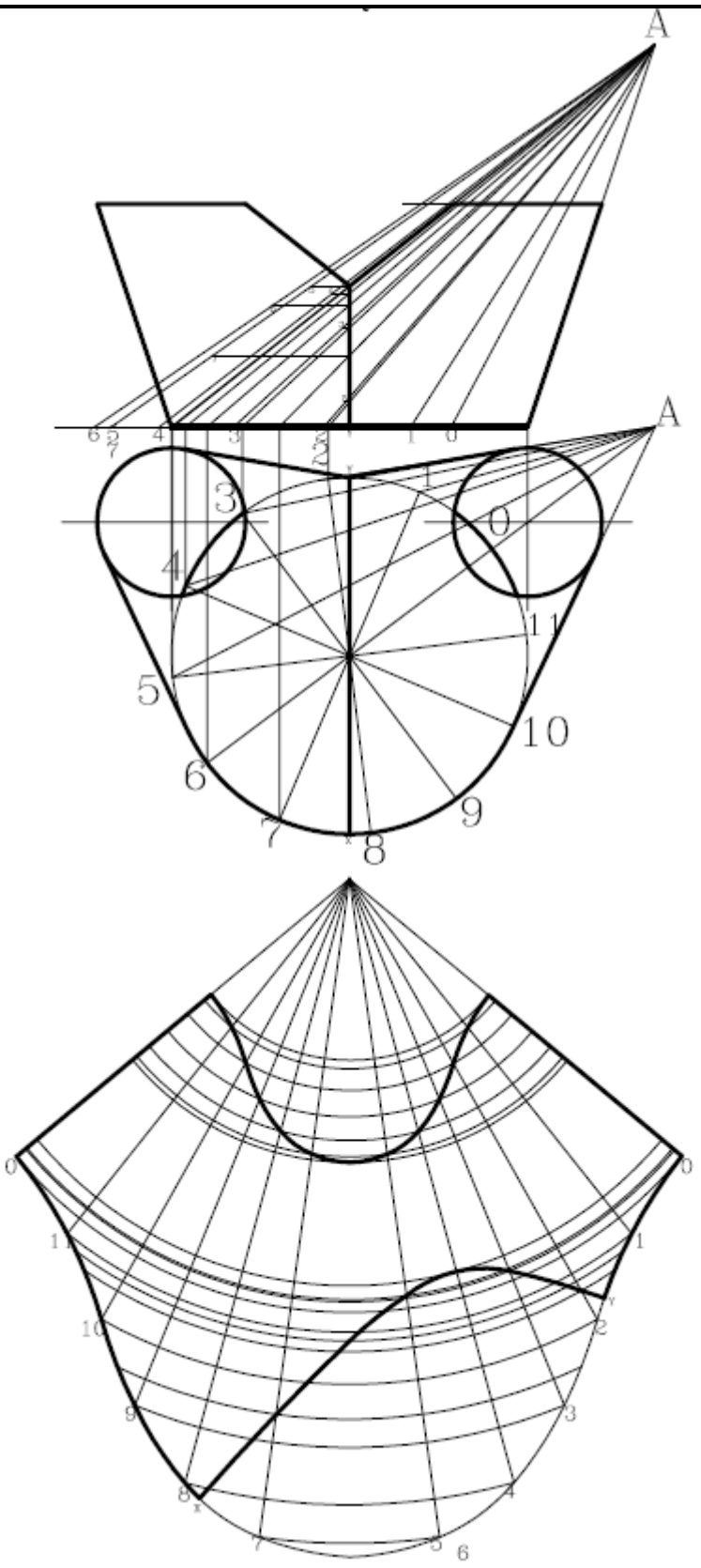

OBLIQUE CONICAL HOPPER
SCALE 1 : 20

[25]

QUESTION 5

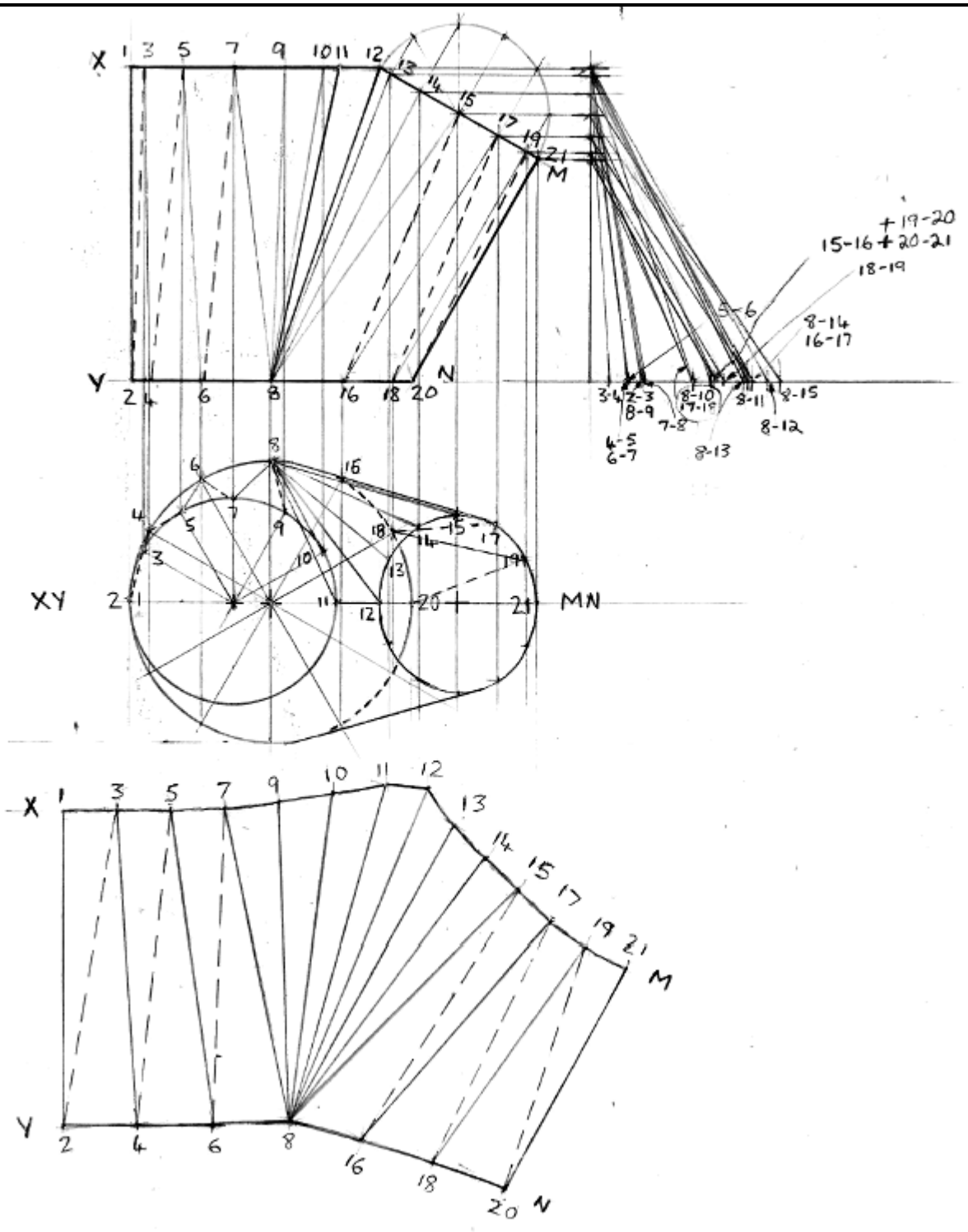

STRAIGHT-BACK JUNCTION PIECE
SCALE 1 : 10 **[25]**

TOTAL: 100

Copyright reserved