higher education & training

Department:
Higher Education and Training
REPUBLIC OF SOUTH AFRICA

NATIONAL CERTIFICATE

PLATING AND STRUCTURAL STEEL DRAWING N4

(8090124)

20 April 2021 (X-paper)
09:00–13:00

REQUIREMENTS: ONE A2 drawing sheet

Nonprogrammable calculators may be used.

This question paper consists of 5 pages, 2 diagram sheets and 1 answer sheet.

258Q1A2120

Copyright reserved

DEPARTMENT OF HIGHER EDUCATION AND TRAINING
REPUBLIC OF SOUTH AFRICA

NATIONAL CERTIFICATE
PLATING AND STRUCTURAL STEEL DRAWING N4
TIME: 4 HOURS
MARKS: 100

NOTE: If you answer more than the required number of questions only the required number will be marked. Clearly cross out all work you do not want to be marked.

INSTRUCTIONS AND INFORMATION

1. Answer any FOUR questions.
2. Read all the questions carefully.
3. Number the answers according to the numbering system used in this question paper.
4. Show all calculations on the DRAWING SHEET.
5. Insert dimensions, a title and the scale on each drawing.
6. Answer TWO questions on the front and TWO questions on the reverse side of the DRAWING SHEET.
7. Use only ONE A2 DRAWING SHEET.
8. Work neatly.

Copyright reserved

QUESTION 1: SQUARE PIPE ELBOW ON CYLINDRICAL PIPE

FIGURE 1, DIAGRAM SHEET 1 (attached), shows the front and top views of a square pipe elbow on a cylindrical pipe. The elbow with cylindrical pipe will be used as part of the ducting in an air-conditioning plant at a medical centre.

Draw to scale 1:10:

1.1 The given views

1.2 An auxiliary view of the square pipe elbow

1.3 A full pattern of the segment P of the square pipe elbow – the joint of the pattern is shown at X-X

1.4 A half pattern of the segment Q of the square pipe elbow – the joint of the pattern is shown at Y-Y

Clearly indicate all construction lines. Print the following title and scale centred beneath the finished drawing:

SQUARE PIPE ELBOW ON CYLINDRICAL PIPE
SCALE 1:10 **[25]**

QUESTION 2: RECTANGLE-TO-RECTANGLE TRANSITION PIECE

FIGURE 2, DIAGRAM SHEET 1 (attached), shows the front and top views of a rectangle-to-rectangle transition piece. The transition piece will be used as a fitting to a machine in a clothing factory.

2.1 Draw, not to scale, the given views.

2.2 Calculate the true lengths to develop the pattern of the transition piece. Write the true lengths on the ANSWER SHEET (attached).

2.3 Use the calculated true lengths and develop, to scale 1:1, the pattern of the transition piece. The joint of the pattern is shown at E5.

NOTE: Marks will not be awarded for lengths taken from the drawing to scale.

Clearly indicate all construction lines. Print the following title and scale centred beneath the finished drawing:

RECTANGLE-TO-RECTANGLE TRANSITION PIECE
SCALE 1:1 **[25]**

Copyright reserved

QUESTION 3: OBLIQUE CONICAL CONNECTION

FIGURE 3, DIAGRAM SHEET 1 (attached), shows the front view of an oblique cone connected to a hemispherical dome, without the line of interpenetration. The oblique conical connection will be fitted to a tank in a brewery.

Draw to scale 1:20:

3.1 The given view

3.2 The full top view without the line of interpenetration

3.3 The line of interpenetration in the front and top views

3.4 The pattern of the oblique cone – the joint of the oblique is shown at X-X

Clearly indicate all construction lines. Print the following title and scale centred beneath the finished drawing:

OBLIQUE CONICAL CONNECTION
SCALE 1:20 **[25]**

QUESTION 4: CONE AND INCLINED PIPE

FIGURE 4, DIAGRAM SHEET 2 (attached), shows the front view of a right cone and inclined cylinder with a common central sphere. The right cone and pipe connection will be part of the piping in an oil refinery.

Draw to scale 1:2:

4.1 The given view

4.2 The pattern of the right cone – the joint is shown at X-X

4.3 The shape of the hole in the inclined cylinder

Clearly indicate all construction lines. Print the following title and scale centred beneath the finished drawing:

CONE AND INCLINED PIPE
SCALE 1:2 **[25]**

Copyright reserved

QUESTION 5: RECTANGLE-TO-ELLIPSE TRANSFORMER

FIGURE 5, DIAGRAM SHEET 2 (attached), shows the front and top views an off-centre rectangle-to-ellipse transformer. The transformer will be used as a fume hood in a spray-painting room.

Draw to scale 1:20:

5.1 The given views 

5.2 The pattern of the transformer – the joint of the pattern is shown at X-X

Clearly indicate all construction lines. Print the following title and scale centred beneath the finished drawing:

RECTANGLE-TO-ELLIPSE TRANSFORMER
SCALE 1:20 **[25]**

TOTAL: 100

Copyright reserved

DIAGRAM SHEET 1

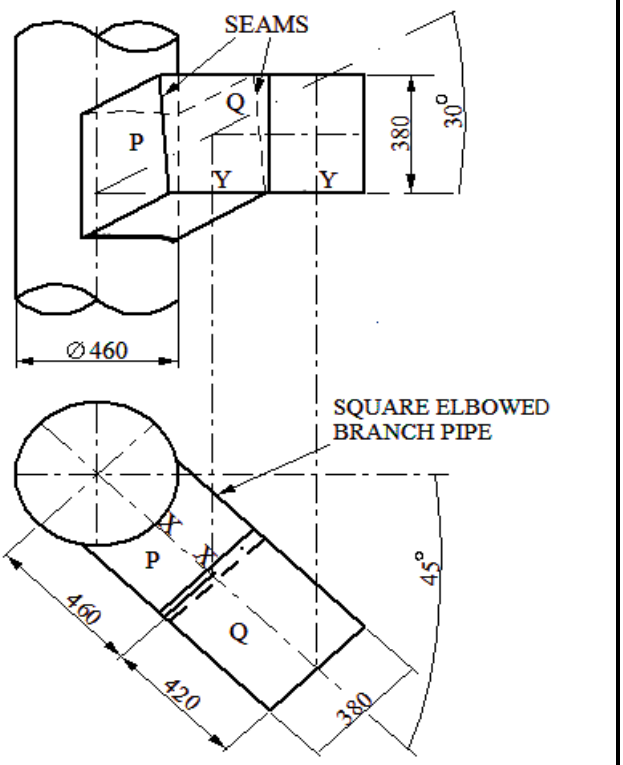

FIGURE 1

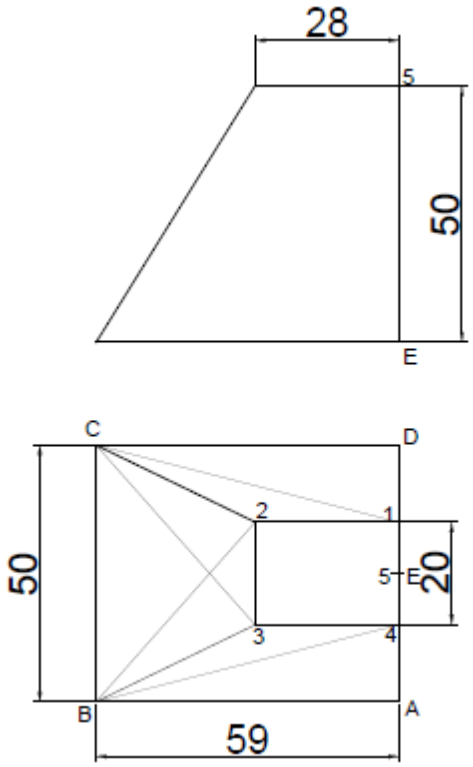

FIGURE 2

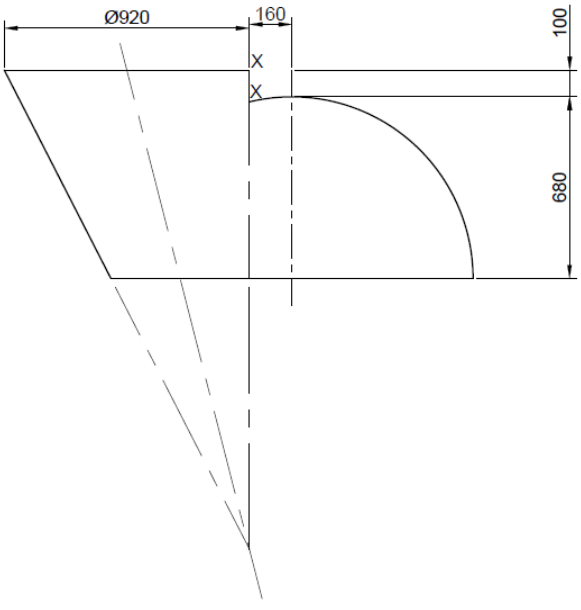

FIGURE 3

Copyright reserved

DIAGRAM SHEET 2

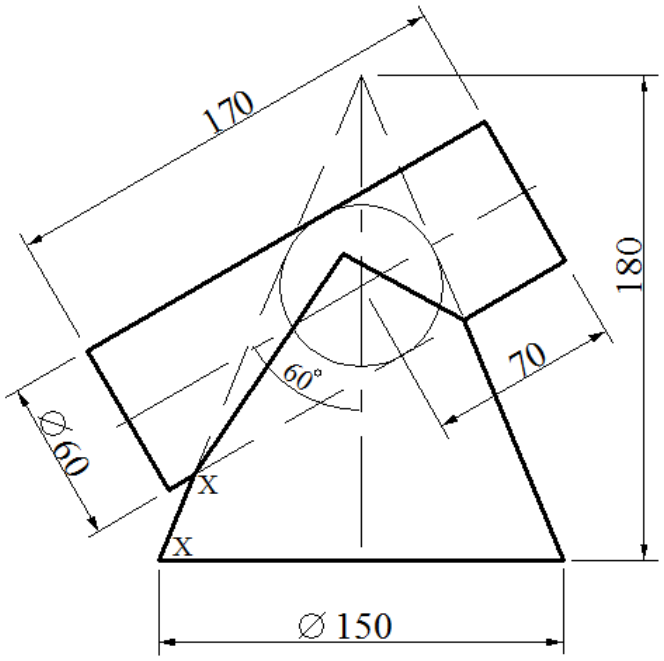

FIGURE 4

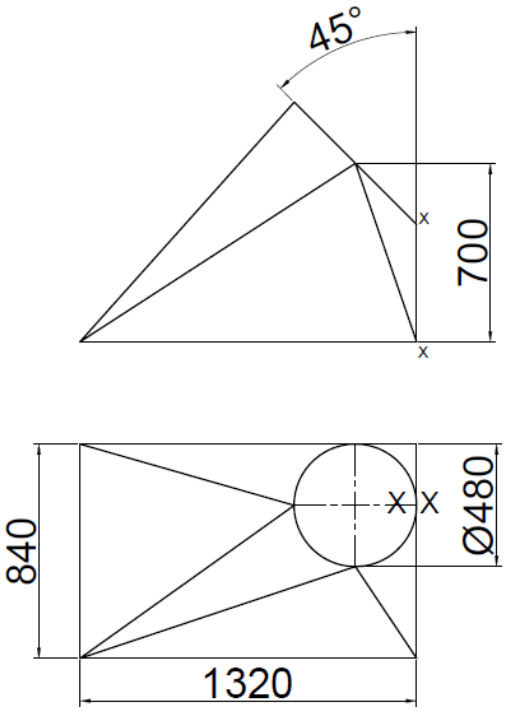

FIGURE 5

Copyright reserved

ANSWER SHEET **EXAMINATION NUMBER:** | | | | | | | | | | | | | |

Submit this ANSWER SHEET with the DRAWING SHEET. All calculations must be done on the DRAWING SHEET.

CALCULATE	TRUE LENGTH	MARK
BC		1
C3 and B2		2
B3 and C2		2
2 – 3		1
B4 and C1		2
2 – 1 and 3 – 4		1
CD and AB		1
D1 and A4		1
A5 and D5		1
1 – 5 and 5 – 4		1
DE and AE		1
E5		1
TOTAL		**15**

Copyright reserved