higher education & training

Department:
Higher Education and Training
REPUBLIC OF SOUTH AFRICA

MARKING GUIDELINE

NATIONAL CERTIFICATE

PLATING AND STRUCTURAL STEEL DRAWING N4

20 April 2021

This marking guideline consists of 9 pages.

MARKERS MUST PLEASE PREPARE THEIR OWN TEMPLATES AS DRAWINGS MAY NOT BE TO SCALE.

Copyright reserved

MARKSHEET

QUESTION 1: SQUARE PIPE ELBOW ON CYLINDRICAL PIPE

ACTIVITY	MARK
Front view without interpenetration curve	5
Top view	3
Auxiliary view	3
Interpenetration line – square pipe elbow into main pipe	3
Full pattern of segment P	5
Half pattern of segment Q	2
Accuracy	1
Line work and projections	2
Neatness	1
TOTAL	**25**

QUESTION 2: RECTANGLE-TO-RECTANGLE TRANSITION PIECE

ACTIVITY	MARK
Front view scale (not to scale)	1
Top view (not to scale)	1
Calculations	15
Pattern of the transition piece	6
Accuracy	1
Neatness	1
TOTAL	**25**

QUESTION 3: OBLIQUE CONICAL CONNECTION

ACTIVITY	MARK
Front view without interpenetration line	3
Full top view without interpenetration line	3
Interpenetration line in the full top view	3
Interpenetration line in the front view	3
Pattern of the oblique cone	9
Accuracy	1
Line work and projections	2
Neatness	1
TOTAL	**25**

Copyright reserved

QUESTION 4: CONE AND INCLINED PIPE

ACTIVITY	MARK
Front view without interpenetration line	3
Construction of interpenetration line in front view	4
Pattern of the cone	9
Shape of the hole in the main pipe	5
Accuracy	1
Line work and projections	2
Neatness	1
TOTAL	**25**

QUESTION 5: RECTANGLE-TO-ELLIPSE TRANSFORMER

ACTIVITY	MARK
Front view	4
Top view	4
Pattern of the rectangle-to-ellipse transformer	13
Accuracy	1
Line work and projections	2
Neatness	1
TOTAL	**25**

Copyright reserved

QUESTION 1: SQUARE PIPE ELBOW ON CYLINDRICAL PIPE

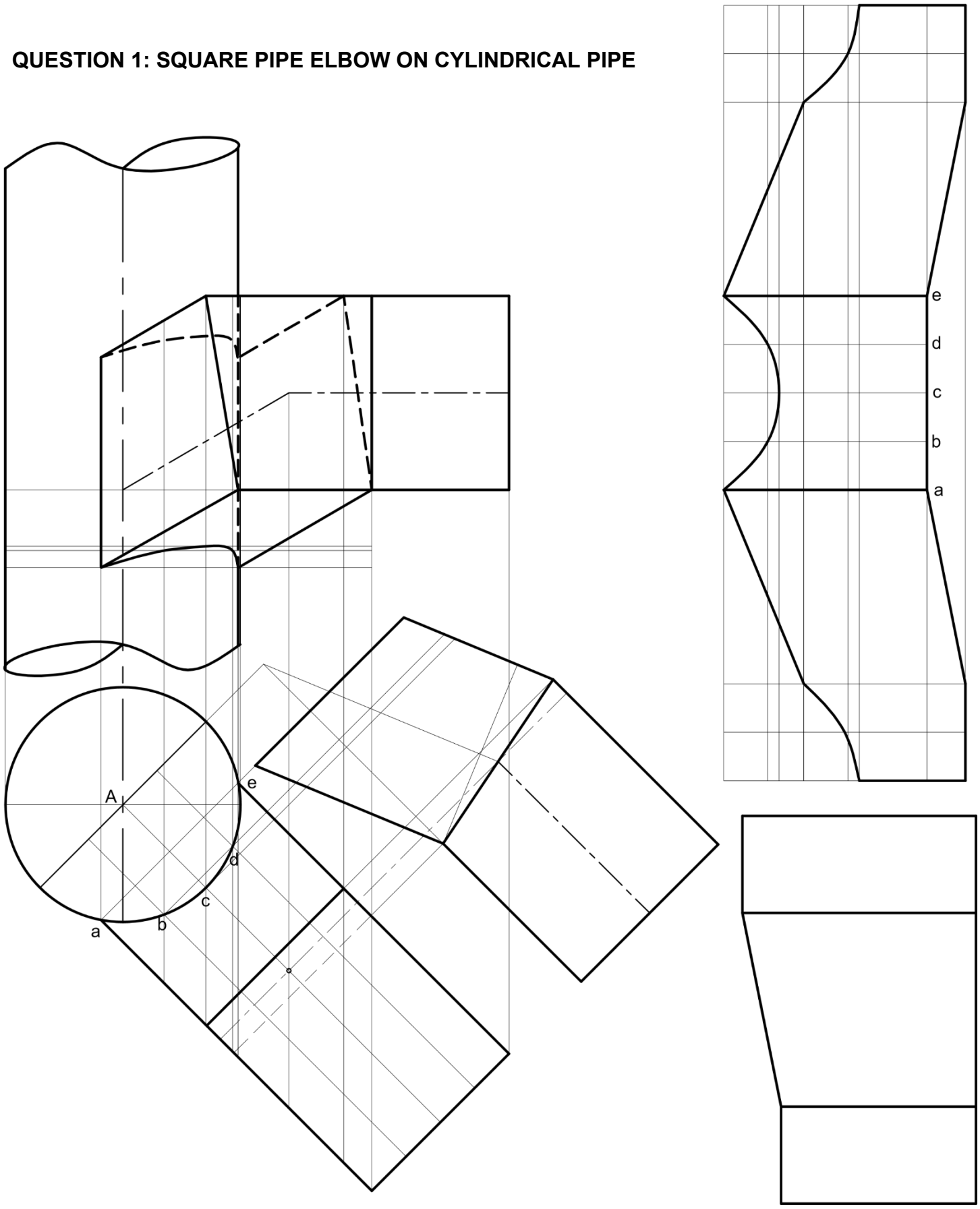

SQUARE PIPE ELBOW ON CYLINDRICAL PIPE
SCALE 1:10 **[25]**

QUESTION 2: RECTANGLE-TO-RECTANGLE TRANSITION PIECE

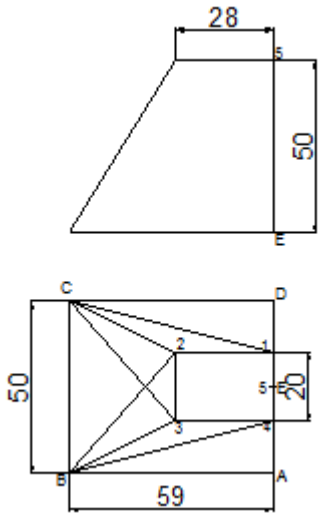

$BC = 50$	(1)
C3 and B2 $= \sqrt{31^2 + (15 + 20)^2 + 50^2} = 68{,}454$	(2)
B3 and C2 $= \sqrt{31^2 + 15^2 + 50^2} = 60{,}712$	(2)
$2 - 3 = 20$	(1)
B4 and C1 $= \sqrt{59^2 + 15^2 + 50^2} = 78{,}778$	(2)
$2 - 3$ and $3 - 4 = 28$	(1)
CD and $AB = 59$	(1)
D1 and A4 $= \sqrt{15^2 + 50^2} = 52{,}202$	(1)
A5 and D5 $= \sqrt{25^2 + 50^2} = 55{,}902$	(1)
$1 - 5$ and $5 - 4 = \frac{20}{2} = 10$	(1)
DE and AE $= \frac{50}{2} = 25$	(1)
$E5 = 50$	

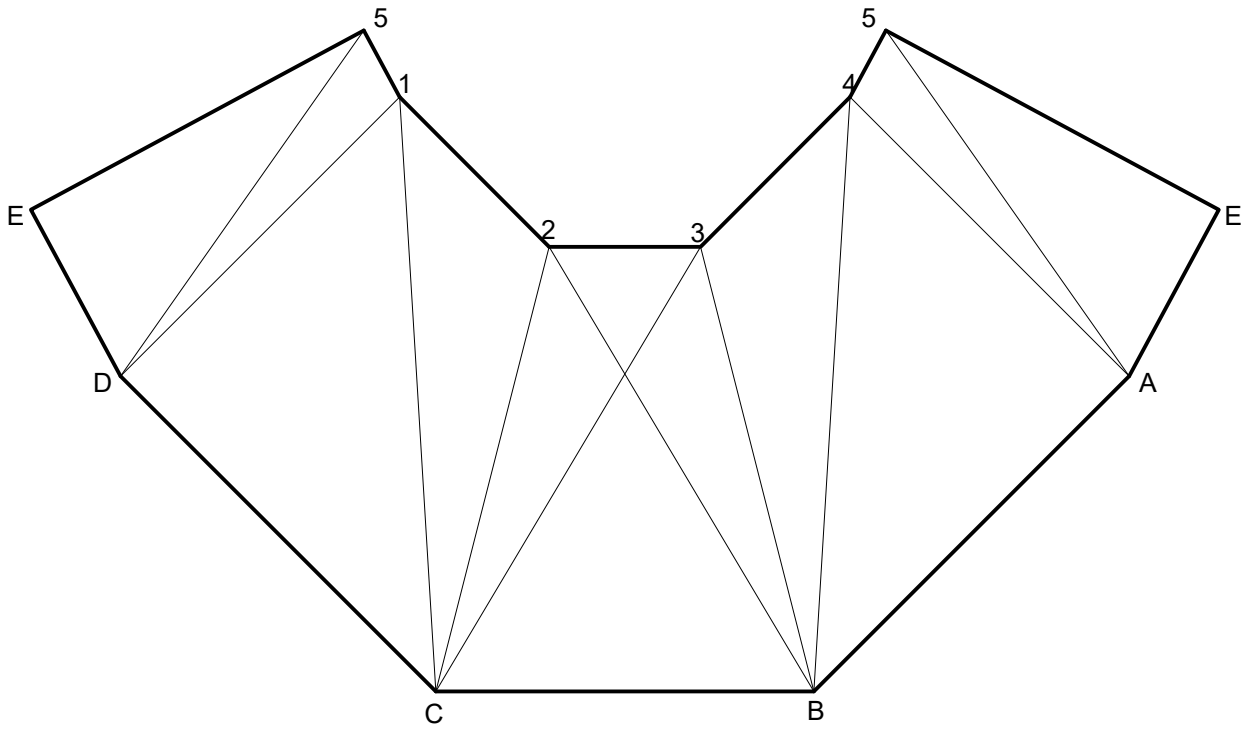

RECTANGLE-TO-RECTANGLE TRANSITION PIECE
SCALE 1:1

(10)
[25]

QUESTION 3: OBLIQUE CONICAL CONNECTION

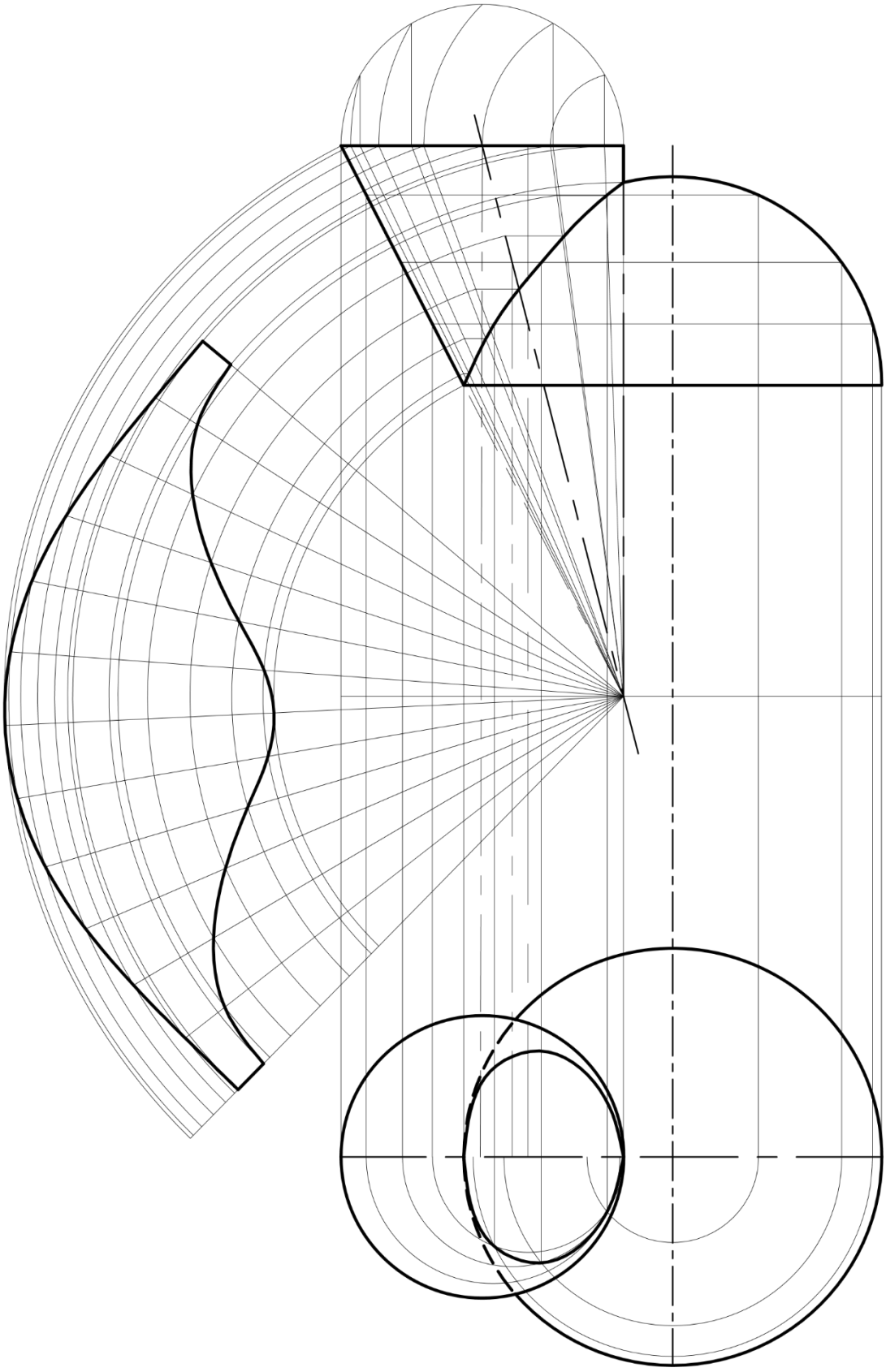

OBLIQUE CONICAL CONNECTION
SCALE 1:20 **[25]**

Copyright reserved

QUESTION 4: CONE AND INCLINED PIPE

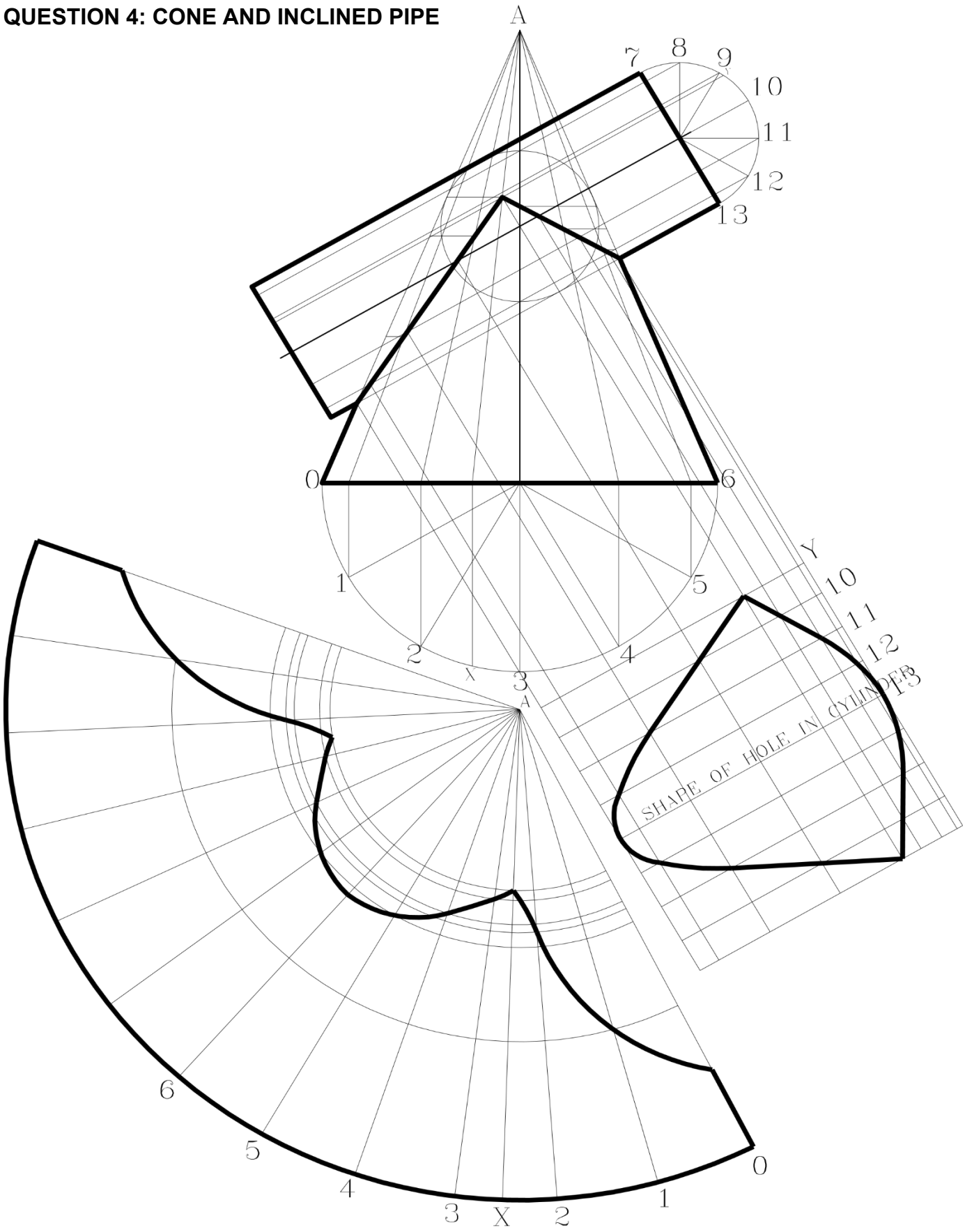

CONE AND INCLINED PIPE
SCALE 1:2 **[25]**

QUESTION 5: RECTANGLE-TO-ELLIPSE TRANSFORMER

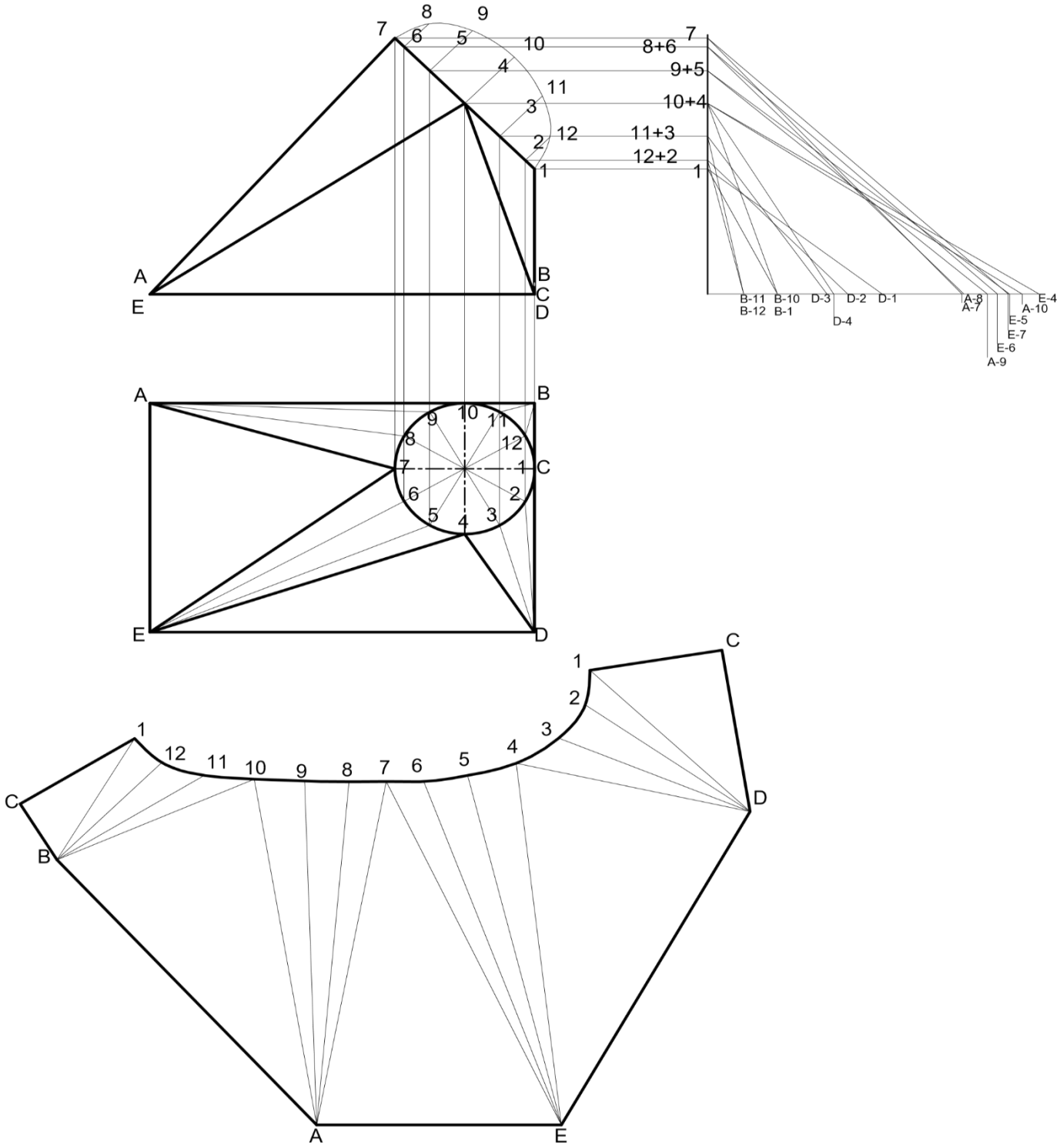

RECTANGLE-TO-ELLIPSE TRANSFORMER
SCALE 1:20

[25]

TOTAL: 100

Copyright reserved