higher education & training

Department:
Higher Education and Training
REPUBLIC OF SOUTH AFRICA

NATIONAL CERTIFICATE

PLATING AND STRUCTURAL STEEL DRAWING N4

(8090124)

15 April 2020 (X-paper)
09:00–13:00

REQUIREMENTS: A2 drawing sheet

Calculators may be used.

This question paper consists of 5 pages, 2 diagram sheets and 1 answer sheet.

258Q1A2015

Copyright reserved

DEPARTMENT OF HIGHER EDUCATION AND TRAINING
REPUBLIC OF SOUTH AFRICA

NATIONAL CERTIFICATE
PLATING AND STRUCTURAL STEEL DRAWING N4
TIME: 4 HOURS
MARKS: 100

NOTE: If you answer more than the required number of questions only the required number will be marked. Clearly cross out all work you do not want to be marked.

INSTRUCTIONS AND INFORMATION

1. Answer any FOUR questions.
2. Read all the questions carefully.
3. Number the answers according to the numbering system used in this question paper.
4. Use only ONE DRAWING SHEET.
5. Answer TWO questions on the font and TWO questions on the reverse side of the DRAWING SHEET.
6. Show all calculations on the DRAWING SHEET.
7. Insert dimensions, a title and the scale on each drawing.
8. Work neatly.

Copyright reserved

QUESTION 1

FIGURE 1, DIAGRAM SHEET 1 (attached), shows the front and left views of an elbow connection to a rectangular pipe. The connection is part of the ducting in an air-conditioning plant at a hotel.

Draw, to scale 1:10, the following views:

1.1 The given views

1.2 An auxiliary view of the front view to show the true shape of the elbow

1.3 The patterns of the segments A and B of the elbow – the joints of the patterns are at X-X

Clearly indicate all construction lines. Print the following title and scale centred beneath the finished drawing:

ELBOW CONNECTION TO RECTANGULAR PIPE
SCALE 1:10

[25]

QUESTION 2

FIGURE 2, DIAGRAM SHEET 1 (attached), shows the front view of a conical spout on a conical body that will be fitted to a stainless steel tank in a fruit juice-processing factory.

Draw, to scale 1:10, the following views:

2.1 The given view

2.2 The top view of the conical spout on the conical body

2.3 The line of interpenetration between the conical spout and the conical body

2.4 The pattern of the conical spout – the joint of the pattern is at X-X

Clearly indicate all construction lines. Print the following title and scale centred beneath the finished drawing:

CONICAL SPOUT ON A CONICAL BODY
SCALE 1:10

[25]

Copyright reserved

QUESTION 3

FIGURE 3, DIAGRAM SHEET 1 (attached), shows the front and top views of a two-way off-centre rectangle-to-circle transition piece. The transition piece will be used as part of the ducting in a dust-extraction plant at a sawmill.

Draw, to scale 1:10, the following views:

3.1 The given views

3.2 The pattern of the transition piece – the joint of the pattern is shown at X-X

Clearly indicate all construction lines. Print the following title and scale centred beneath the finished drawing:

TWO-WAY OFF-CENTRE TRANSITION PIECE
SCALE 1:10 **[25]**

QUESTION 4

FIGURE 4, DIAGRAM SHEET 2 (attached), shows the front and top views of an off-centre rectangle-to-round transition piece. The transition piece will be used as a reducer on a machine to connect a stainless steel pipe in a dairy.

4.1 Draw, not to scale, the given views.

4.2 Calculate the true lengths to develop the half pattern of the transition piece. Write the true lengths on the ANSWER SHEET (attached).

4.3 Use the calculated true lengths and develop, to scale 1:1, the half pattern of the transition piece. The joints of the transition piece are shown at B7 and E1.

NOTE: Marks will not be awarded for lengths taken from the drawing to scale.

Clearly indicate all construction lines. Print the following title and scale centred beneath the finished drawing:

OFF-CENTRE RECTANGLE-TO-ROUND
SCALE 1:1 **[25]**

Copyright reserved

QUESTION 5

FIGURE 5, DIAGRAM SHEET 2 (attached), shows three views of a rectangle-to-square transition piece. The transition piece will be used to connect a square duct to a rectangular duct in the ventilation system of a glass-manufacturing factory.

Draw, to scale 1:5, the following views:

5.1 The given views 

5.2 The patterns of the sides A, B, C, D, E, F of the transition piece

Clearly indicate all construction lines. Print the following title and scale centred beneath the finished drawing:

RECTANGLE-TO-SQUARE TRANSITION PIECE
SCALE 1:5 **[25]**

TOTAL: 100

Copyright reserved

DIAGRAM SHEET 1

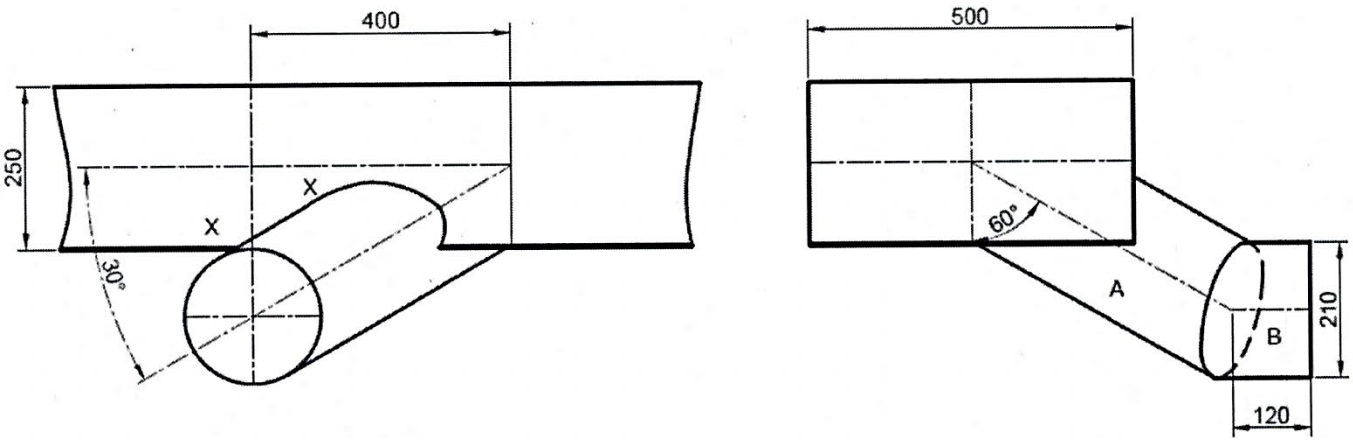

FIGURE 1

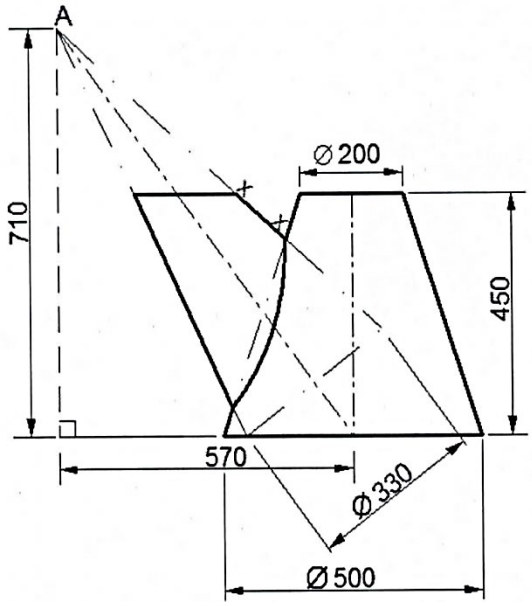

FIGURE 2

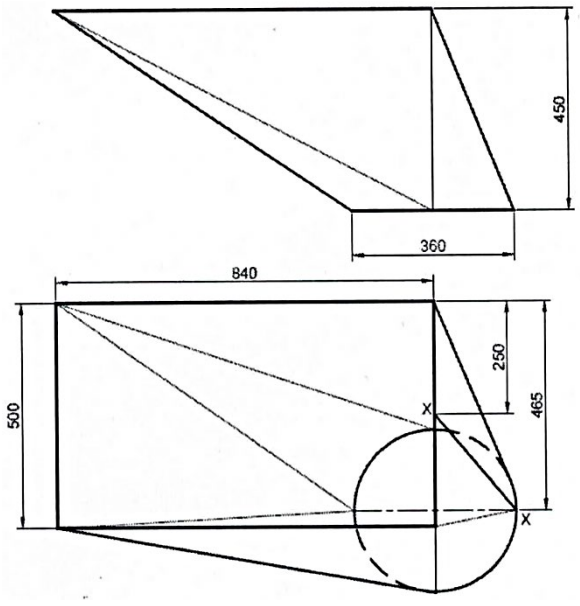

FIGURE 3

Copyright reserved

DIAGRAM SHEET 2

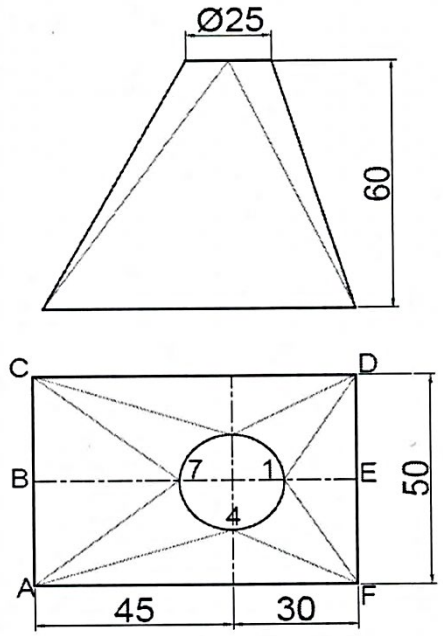

FIGURE 4

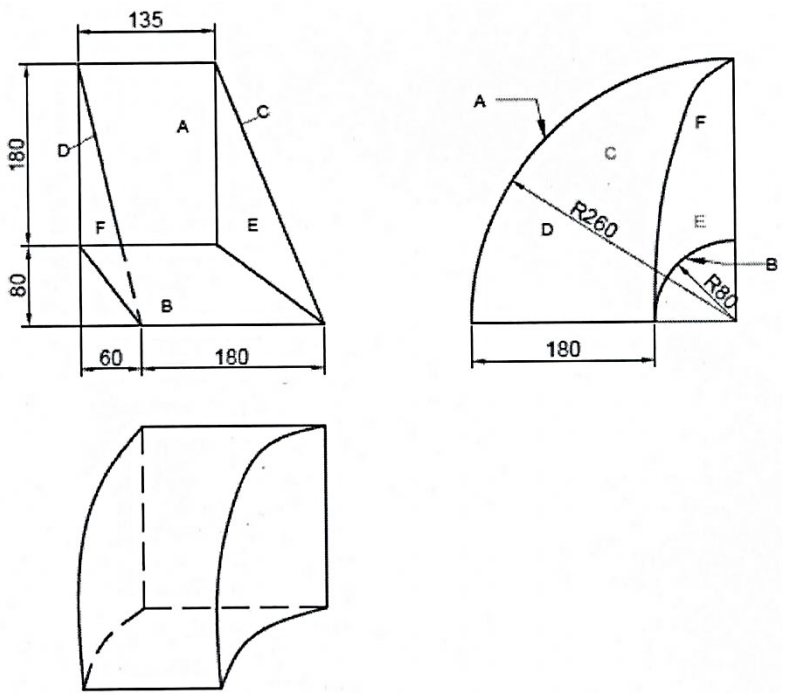

FIGURE 5

Copyright reserved

ANSWER SHEET

EXAMINATION NUMBER:

QUESTION 4.2

Do all calculations on the DRAWING SHEET and submit this ANSWER SHEET together with the DRAWING SHEET.

CALCULATE	TRUE LENGTH	%
ARC length 1/12		1
AB & EF		1
AE		1
E1		1
F1		1
F2		1½
F3		1½
F4		1
A4		1
A5		1½
A6		1½
A7		1
B7		1
		15

Copyright reserved