higher education & training

Department:
Higher Education and Training
REPUBLIC OF SOUTH AFRICA

MARKING GUIDELINE

NATIONAL CERTIFICATE

PLATING AND STRUCTURAL STEEL DRAWING N4

15 April 2020

This marking guideline consists of 9 pages.

Copyright reserved

MARKSHEET

QUESTION 1: ELBOW CONNECTION TO RECTANGULAR PIPE

ACTIVITY	MARK
Front view without interpenetration line	2
Left view	3
Interpenetration line in the front view	3
Auxiliary view showing the true shape of the elbow and the joint line between the elbow and the rectangular pipe	4
Pattern of part A of the elbow	6
Pattern of part B of the elbow	3
Accuracy	1
Line work and projections	2
Neatness	1
TOTAL:	**25**

QUESTION 2: CONICAL SPOUT ON A CONICAL BODY

ACTIVITY	MARK
Front view without interpenetration curve	4
Top view without interpenetration curve	4
Interpenetration curve in top view	3
Interpenetration curve in font view	2
Pattern of conical spout	8
Accuracy	1
Line work and projections	2
Neatness	1
TOTAL:	**25**

QUESTION 3: TWO-WAY OFF-CENTRE TRANSITION PIECE

ACTIVITY	MARK
Front view	4
Top view	4
Pattern of the transition piece	13
Accuracy	1
Line work and projections	2
Neatness	1
TOTAL:	**25**

Copyright reserved

QUESTION 4: OFF-CENTRE RECTANGLE-TO-ROUND

ACTIVITY	MARK
Front view (not to scale)	1
Top view (not to scale)	1
Calculations	15
Half pattern of the transition piece	6
Accuracy	1
Neatness	1
TOTAL:	**25**

QUESTION 5: RECTANGLE-TO-SQUARE TRANSITION PIECE

ACTIVITY	MARK
Front view	4
Top view	3
Left view	2
Pattern of the back side A	2
Pattern of the throat side B	2
Pattern of the side C	2
Pattern of the side D	2
Pattern of the side E	2
Pattern of the side F	2
Accuracy	1
Line work and projections	2
Neatness	1
TOTAL:	**25**

Copyright reserved

QUESTION 1

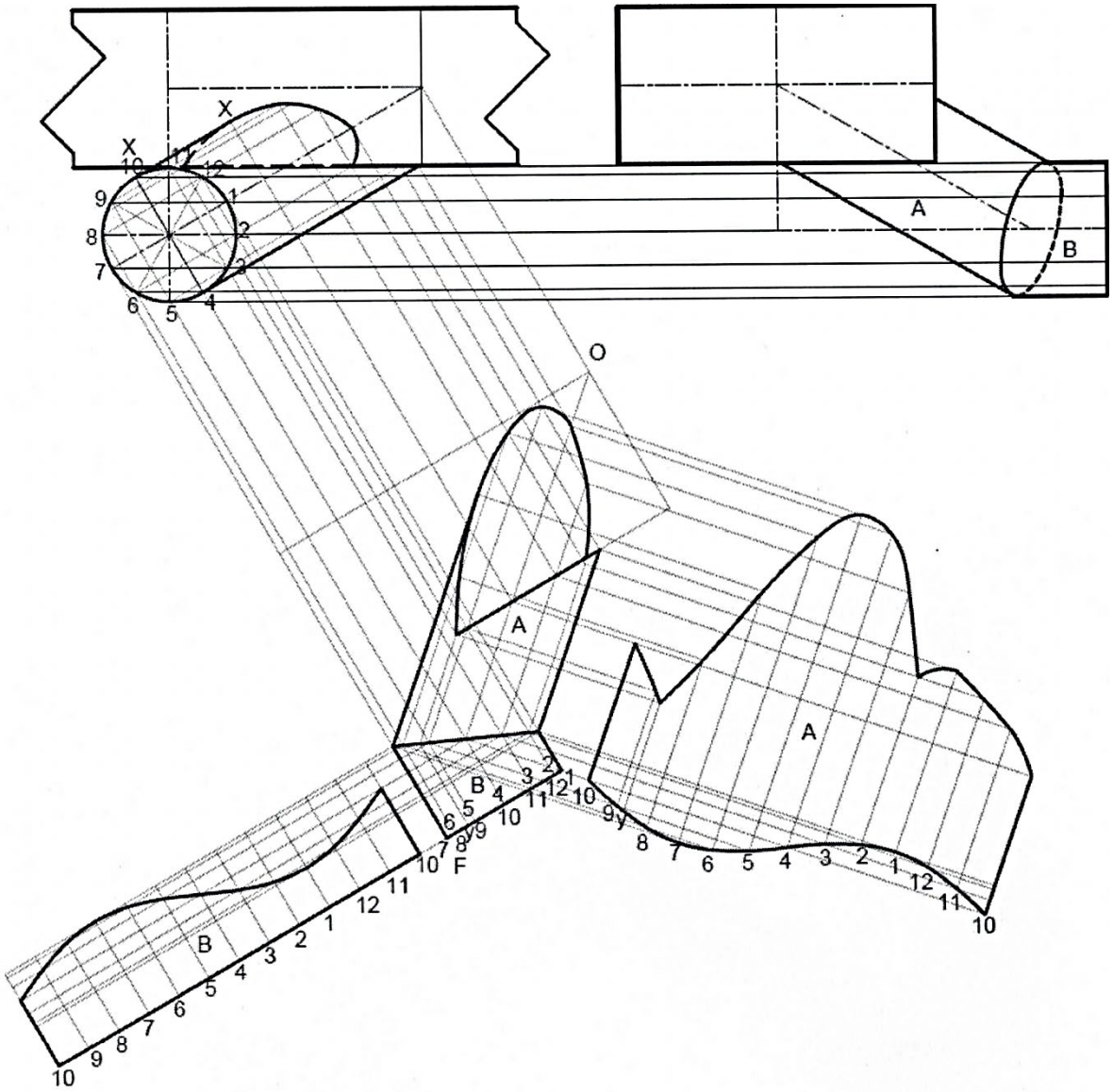

ELBOW CONNECTION TO RECTANGULAR PIPE
SCALE 1:10 **[25]**

QUESTION 2

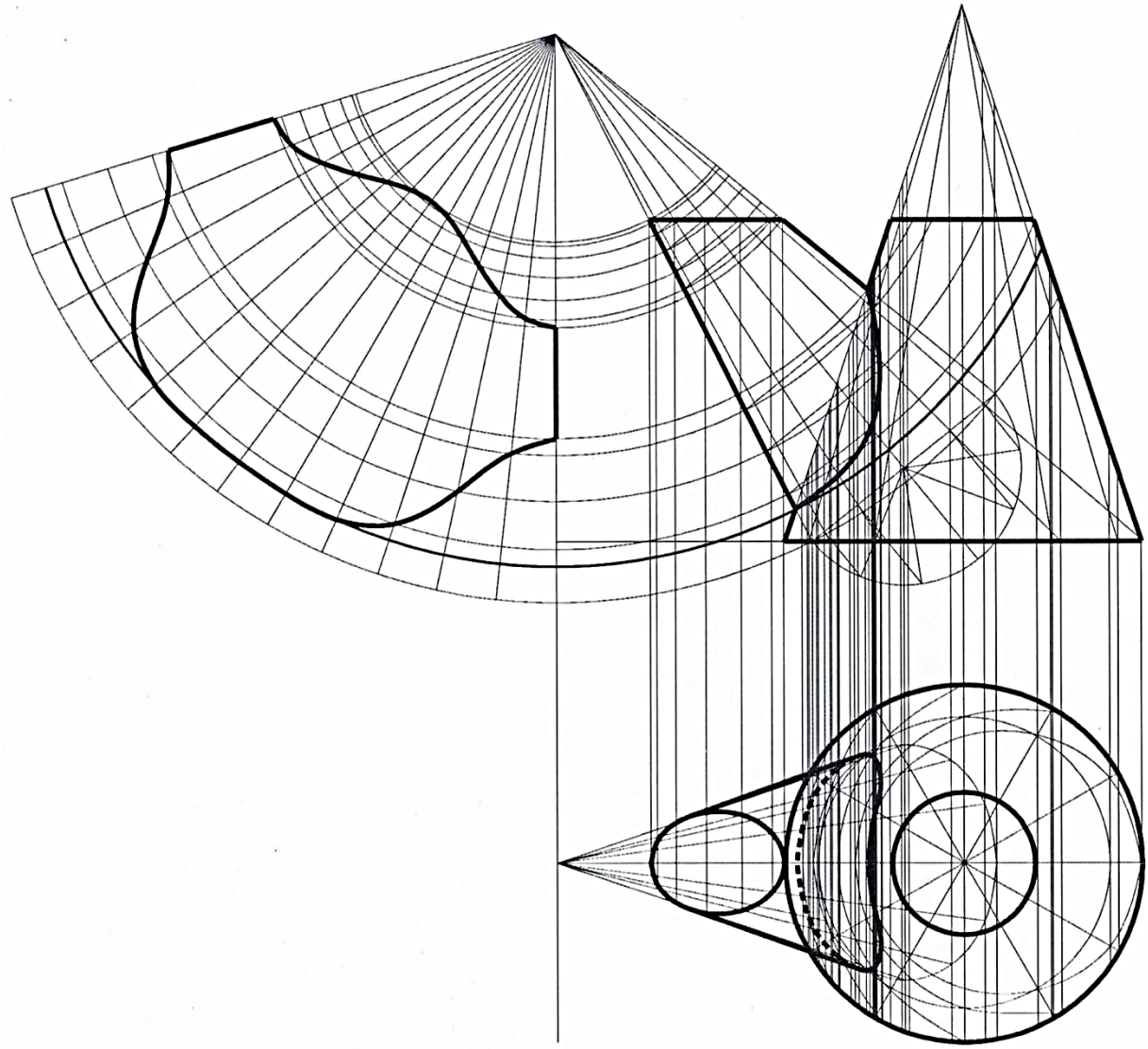

CONICAL SPOUT ON A CONICAL BODY
SCALE 1:10 **[25]**

QUESTION 3

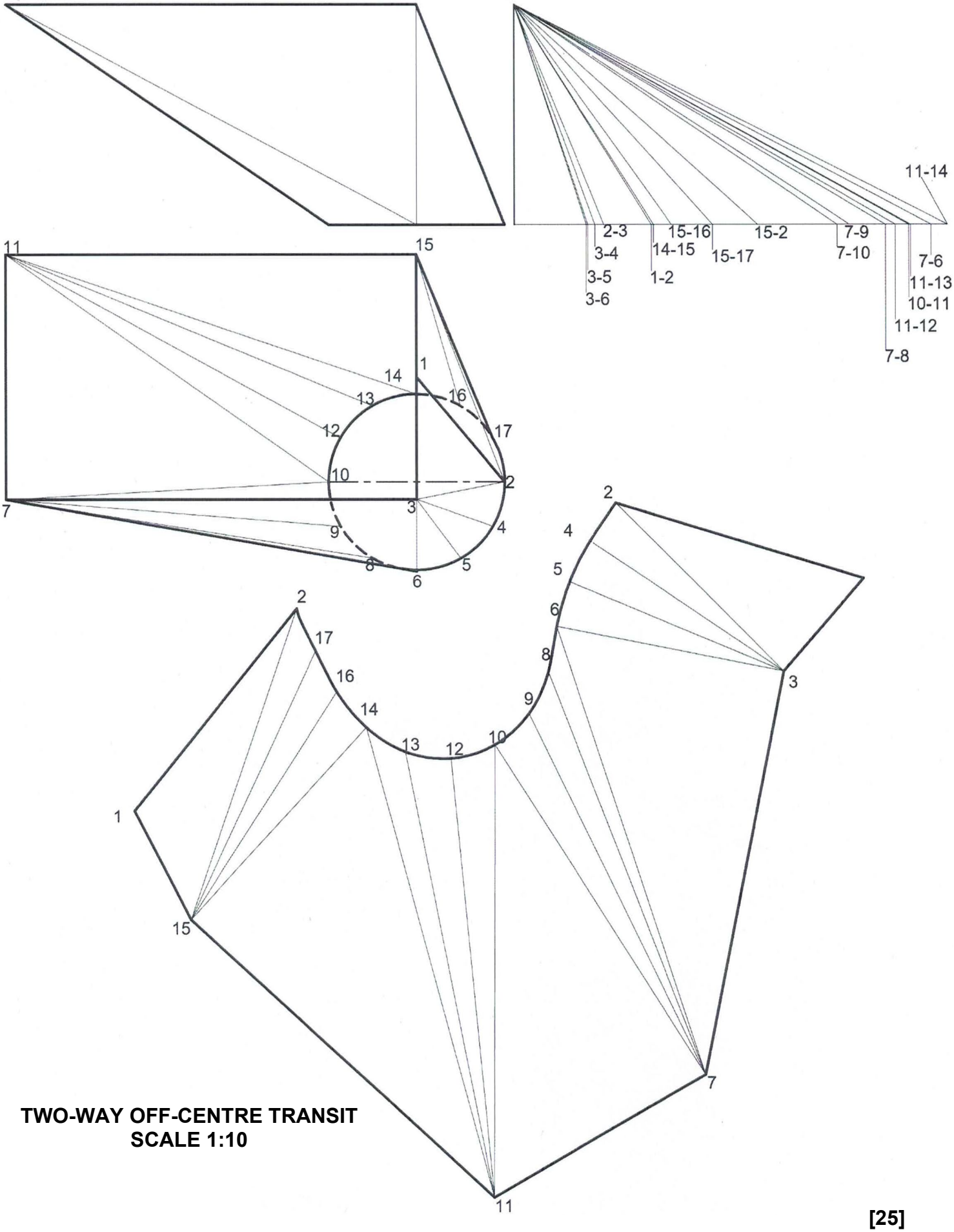

TWO-WAY OFF-CENTRE TRANSIT
SCALE 1:10

[25]

QUESTION 4

DIAGRAMS AND CALCULATIONS

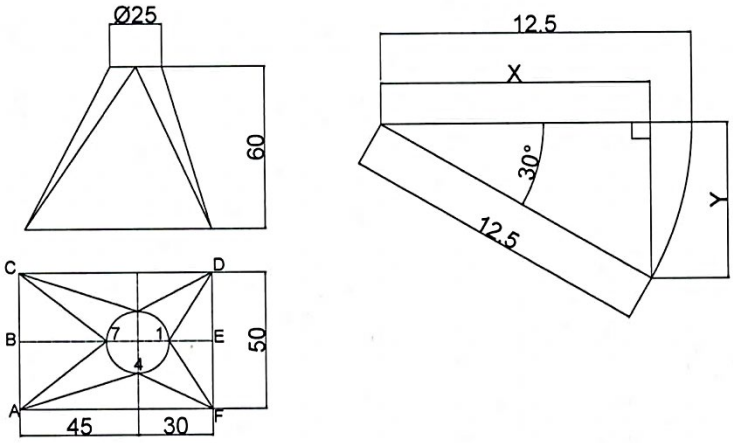

OFF-CENTRE RECTANGLE-TO-ROUND

For 30°, X = 12,5cos30° = 10,825
and Y = 12,5sin30° = 6,25

For 60°, X = 12,5cos60° = 6,25
and Y = 12,5sin60° = 10,825

Arc length $= \frac{\pi \times 25}{12} = 6{,}545$ (1)
AB & EF = 25 (1)
AF = 75 (1)
E1 $= \sqrt{60^2 + 17{,}5^2} = 62{,}5$ (1)
F1 $= \sqrt{60^2 + (30 - 12{,}5)^2 + 25^2} = 67{,}315$ (1)
F2 $= \sqrt{60^2 + (30 - 10{,}825)^2 + (25 - 6{,}25)^2} = 65{,}721$ (1½)
F3 $= \sqrt{60^2 + (30 - 6{,}25)^2 + (25 - 10{,}825)^2} = 66{,}068$ (1½)
F4 $= \sqrt{60^2 + 30^2 + (25 - 12{,}5)^2} = 68{,}237$ (1)
A4 $= \sqrt{60^2 + 45^2 + (25 - 12{,}5)^2} = 76{,}035$ (1)
A5 $= \sqrt{60^2 + (45 - 6{,}25)^2 + (25 - 10{,}825)^2} = 72{,}818$ (1½)
A6 $= \sqrt{60^2 + (45 - 10{,}825)^2 + (25 - 6{,}25)^2} = 71{,}551$ (1½)
A7 $= \sqrt{60^2 + (45 - 12{,}5)^2 + 25^2} = 72{,}672$ (1)
B7 $= \sqrt{60^2 + (45 - 12{,}5)^2} = 68{,}237$ (1)

Copyright reserved

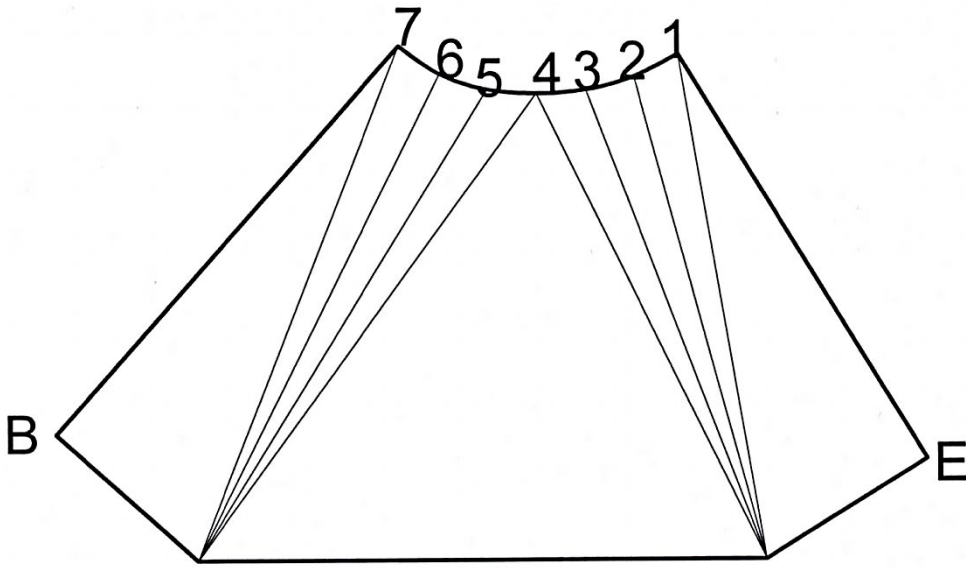

OFF-CENTRE RECTANGLE-TO-ROUND
SCALE 1:1 **[25]**

QUESTION 5

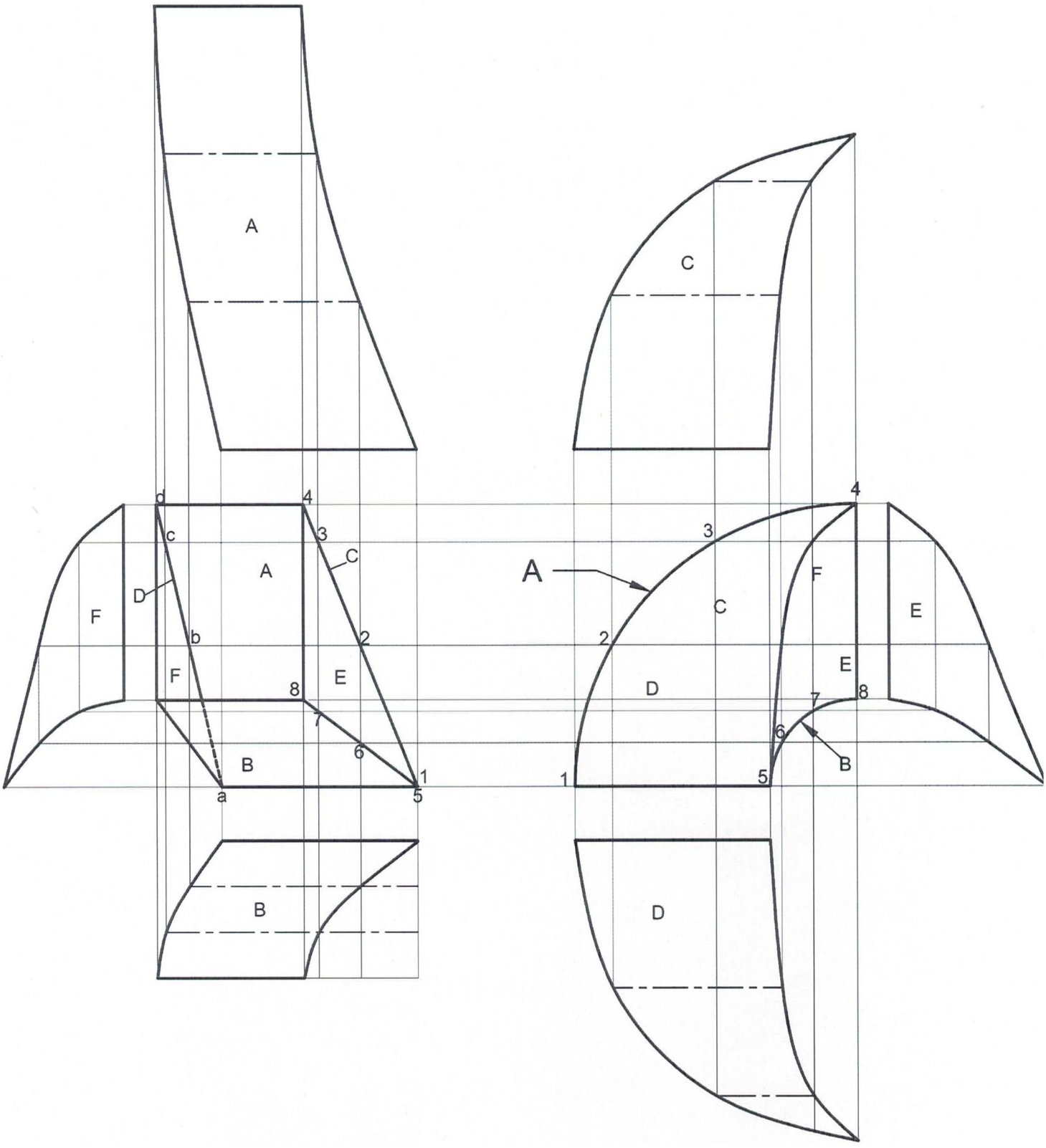

RECTANGLE-TO-SQUARE TRANSITION PIECE
SCALE 1:5 **[25]**

TOTAL: 100

Copyright reserved