higher education & training

Department:
Higher Education and Training
REPUBLIC OF SOUTH AFRICA

T1360**(E)**(A10)T

NATIONAL CERTIFICATE

PLATING AND STRUCTURAL STEEL DRAWING N4

(8090124)

10 April 2019 (X-Paper)
09:00–13:00

REQUIREMENTS: ONE A2 drawing sheet

Calculators may be used.

This question paper consists of 5 pages, 2 diagram sheets and 1 answer sheet.

Copyright reserved

DEPARTMENT OF HIGHER EDUCATION AND TRAINING
REPUBLIC OF SOUTH AFRICA

NATIONAL CERTIFICATE
PLATING AND STRUCTURAL STEEL DRAWING N4
TIME: 4 HOURS
MARKS: 100

NOTE: If you answer more than the required number of questions, only the required number will be marked. Clearly cross out ALL work you do NOT want to be marked.

INSTRUCTIONS AND INFORMATION

1. Answer any FOUR questions.
2. Read ALL the questions carefully.
3. Number the answers according to the numbering system used in this question paper.
4. Show ALL calculations on the DRAWING SHEET.
5. Insert dimensions, a title and the scale on each drawing.
6. Answer TWO questions on the front and TWO questions on the reverse side of the DRAWING SHEET.
7. Use only ONE DRAWING SHEET.
8. Write neatly and legibly.

Copyright reserved

QUESTION 1

FIGURE 1, DIAGRAM SHEET 1 (attached), shows the front view of a rectangular transition piece, which intersects a round pipe, with the detail of the rectangular end. The transition piece is part of the ducting of a dust-extraction plant at a furniture-manufacturing plant.

Draw, to scale 1:10, the following views:

1.1 The given view

1.2 The top view showing the interpenetration curve between the transition piece and the pipe

1.3 The pattern of the transition piece – the joint of the pattern is shown at X-X

Clearly indicate ALL construction lines on the completed drawing. Print the following title and scale centred beneath the finished drawing:

RECTANGULAR-TO-ELLIPTICAL TRANSFORMER
SCALE 1:10

[25]

QUESTION 2

FIGURE 2, DIAGRAM SHEET 1 (attached), shows the front view of a three-way conical branch piece. The branch piece will be part of the piping that circulates hot air in three drying ovens in the spray-painting section of a car-manufacturing plant.

Draw, to scale 1:20, the following views:

2.1 The given view

2.2 The pattern of the right cone in the middle – the joint of the pattern is shown at Y-Y

2.3 The pattern of the oblique cone on the right – the joint of the pattern is shown at X-X

Clearly indicate ALL construction lines on the completed drawing. Print the following title and scale centred beneath the finished drawing:

THREE-WAY CONICAL BRANCH PIECE
SCALE 1:20

[25]

Copyright reserved

QUESTION 3

FIGURE 3, DIAGRAM SHEET 1 (attached), shows the front and top views of a rectangle-to-square transition piece. The transition piece will be used as a guide for leather strips on sewing machines in the leather sandal manufacturing section of a factory.

3.1 Draw the given views (NOT to scale).

3.2 Calculate the true lengths to develop the pattern of the transition piece. Write the true lengths on the ANSWER SHEET (attached).

3.3 Use the calculated true lengths and develop, to scale 1:1, the pattern of the transition piece. The joint of the pattern is shown at D0.

Clearly indicate ALL construction lines on the completed drawing. Print the following title and scale centred beneath the finished drawing:

RECTANGLE-TO-SQUARE TRANSITION PIECE
SCALE 1:1 **[25]**

QUESTION 4

FIGURE 4, DIAGRAM SHEET 2 (attached), shows the front and top views of a rectangle to three-way circular branch piece. The branch piece will be used as part of the ducting in an air-conditioning plant at a hospital.

Draw, to scale 1:10, the following views:

4.1 The given views

4.2 The half pattern of the branch piece – the joint of the pattern is shown at X-X and Y-Y

Clearly indicate ALL construction lines on the completed drawing. Print the following title and scale centred beneath the finished drawing:

RECTANGLE-TO-THREE-WAY CIRCULAR BRANCH
SCALE 1:10 **[25]**

Copyright reserved

QUESTION 5

FIGURE 5, DIAGRAM SHEET 2 (attached), shows the front view of a right cone intersected by a rectangular pipe. The intersection piece will be used to blow cold air over hot parts hanging on hooks in a rotating drum at a company manufacturing small parts for cars.

Draw, to scale 1:20, the following views:

5.1 The given view

5.2 The top view

5.3 The pattern of the right cone – the joint of the pattern is shown at X-X

5.4 The pattern of the rectangular pipe A – the joint of the pattern is at Y-Y

Clearly indicate ALL construction lines on the completed drawing. Print the following title and scale centred beneath the finished drawing:

RECTANGULAR PIPE INTO RIGHT CONE
SCALE 1:20

[25]

TOTAL: 100

Copyright reserved

DIAGRAM SHEET 1

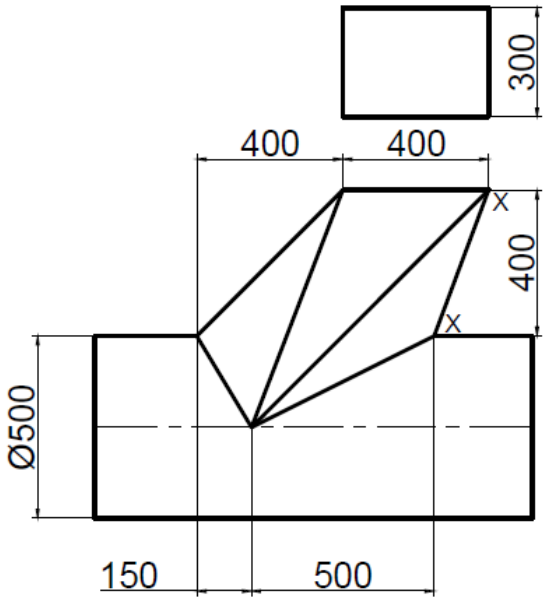

FIGURE 1

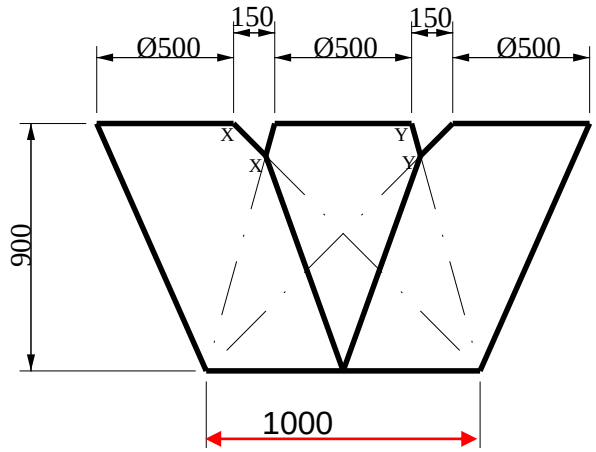

FIGURE 2

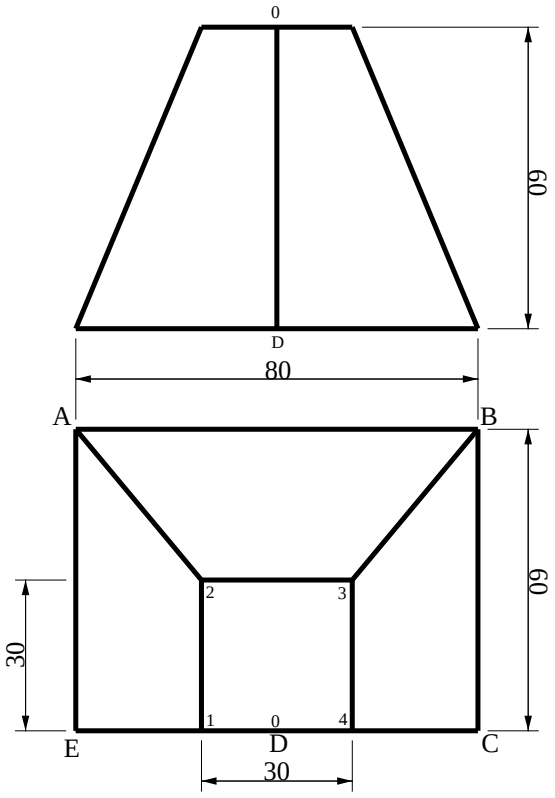

FIGURE 3

Copyright reserved

DIAGRAM SHEET 2

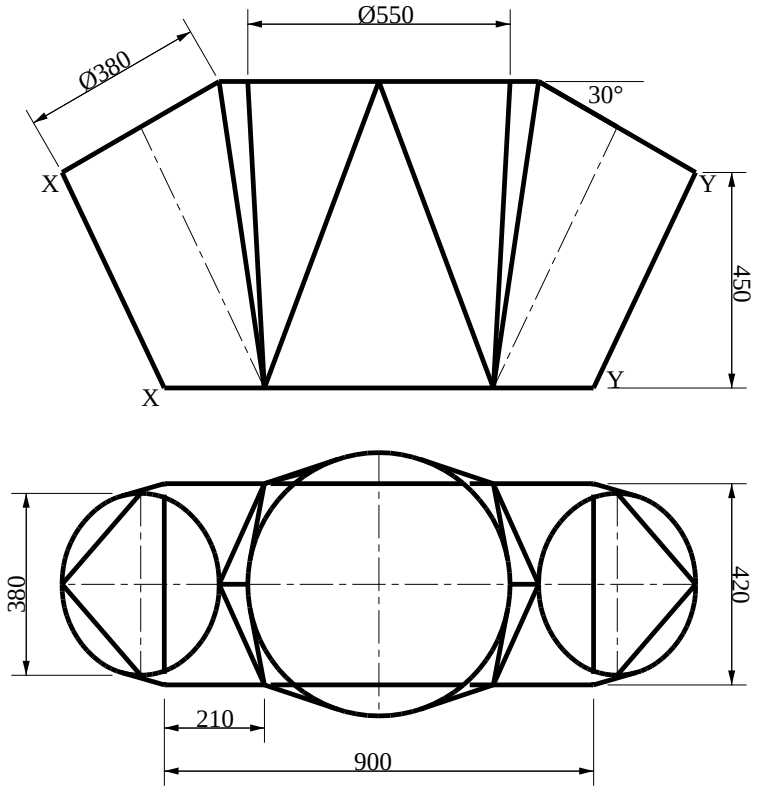

FIGURE 4

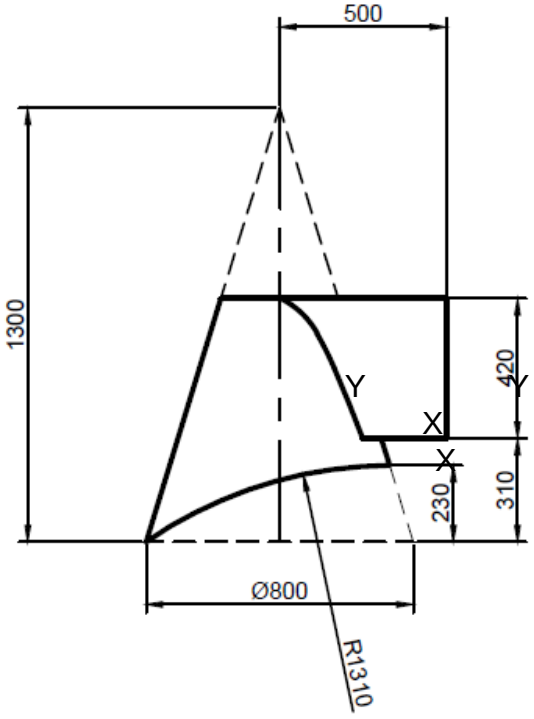

FIGURE 5

Copyright reserved

ANSWER SHEET EXAMINATION NUMBER:

This table must be submitted together with the DRAWING SHEET.

Do the calculations on the DRAWING SHEET.

CALCULATE	TRUE LENGTH	%
A3 and B2		2
A2 and B3		2
A1 and B4		2
E1 and C4		1
E0 and C0		2
D0		1
1–2; 2–3; 3–4 and 1–4		1
AB		1
AE and BC		1
1–0 and 4–0		1
ED and DC		1
TOTAL:		**15**

Copyright reserved