higher education & training

Department:
Higher Education and Training
REPUBLIC OF SOUTH AFRICA

T1360**(E)**(A10)T

NATIONAL CERTIFICATE

PLATING AND STRUCTURAL STEEL DRAWING N4

(8090124)

10 April 2018 (X-Paper)
09:00–12:00

REQUIREMENTS: **A2 drawing paper**
Calculators may be used.

This question paper consists of 5 pages, 1 answer sheet and 2 diagram sheets.

Copyright reserved

DEPARTMENT OF HIGHER EDUCATION AND TRAINING
REPUBLIC OF SOUTH AFRICA

NATIONAL CERTIFICATE
PLATING AND STRUCTURAL STEEL DRAWING N4
TIME: 4 HOURS
MARKS: 100

NOTE: If you answer more than FOUR questions, only FOUR questions will be marked. All work you do not want to be marked must be clearly crossed out.

INSTRUCTIONS AND INFORMATION

1. Answer any FOUR of the five questions.
2. Read ALL the questions carefully.
3. Number the answers according to the numbering system used in this question paper.
4. Answer TWO questions on the front and TWO questions on the reverse side of the drawing paper.
5. Only ONE sheet of drawing paper may be used.
6. Show ALL the calculations on the drawing paper.
7. Insert the dimensions and title and scale with each drawing.
8. Write neatly and legibly.

Copyright reserved

QUESTION 1: FLARED VENTILATION HEAD

FIGURE 1, DIAGRAM SHEET 1, shows THREE views of a flared ventilation head. The ventilation head will be used at the end of a downpipe in a sawdust extraction plant to suck up sawdust on the floor in a woodwork workshop.

Draw the following views to scale 1:10:

1.1 The font view and left view

1.2 The top view

1.3 The pattern of the back

1.4 The pattern of the throat

1.5 The pattern of the sides

The completed drawing must clearly indicate all the construction lines. The following title and scale must be printed centrally below the finished drawing:

FLARED VENTILATION HEAD
SCALE 1 : 10 **[25]**

QUESTION 2: OBLIQUE CONICAL CONNECTION ON CONICAL COVER

FIGURE 2, DIAGRAM SHEET 1, shows the front view of an oblique conical connection on a conical cover which will be used on a beer tank in a brewery.

Draw the following views to scale 1 : 10:

2.1 The given view

2.2 A half top view of the oblique conical connection on the conical cover

2.3 Construct the line of penetration between the oblique conical connection and the conical cover.

2.4 The pattern of the oblique cone. The joint of the pattern is shown at X–X.

The completed drawing must clearly indicate all the construction lines. The following title and scale must be printed centrally below the finished drawing:

OBLIQUE CONICAL CONNECTION ON CONICAL COVER
SCALE 1 : 10 **[25]**

Copyright reserved

QUESTION 3: SQUARE-TO-TWO-CIRCLES JUNCTION PIECE

FIGURE 3, DIAGRAM SHEET 1, shows the front view of a square-to-two-circles junction piece. The junction piece will be used as part of the ducting of an air-conditioning plant in a shopping mall.

Draw the following views to scale 1 : 10:

3.1 The given view

3.2 The top view

3.3 Half of the pattern of the junction piece. The joints of the junction are shown at X–X and Y–Y.

The completed drawing must clearly indicate all the construction lines. The following title and scale must be printed centrally below the finished drawing:

SQUARE-TO-TWO-CIRCLES JUNCTION PIECE
SCALE 1 : 10 **[25]**

QUESTION 4: TWO-POINT CONICAL NOZZLE

FIGURE 4, DIAGRAM SHEET 2, shows the front view of a two-point conical nozzle forming a T-piece with a right pipe. The conical nozzle will be used to blow hot air into a drying tunnel in a spray-painting workshop.

Draw the following views to scale 1 : 2:

4.1 The given view

4.2 Half of the pattern of one point of the nozzle. The joint of the pattern is shown at X–X.

4.3 Half of the pattern of the right pipe. The joint of the pattern is shown at Y–Y.

The completed drawing must clearly indicate all the construction lines. The following title and scale must be printed centrally below the finished drawing:

TWO-POINT CONICAL NOZZLE
SCALE 1 : 2 **[25]**

Copyright reserved

QUESTION 5: RECTANGLE-TO-CIRCLE TRANSITION PIECE

FIGURE 5, DIAGRAM SHEET 2, shows the front view and top view of an off-centre rectangle-to-circle transition piece. The transition piece will be used to connect a milk processing machine to the piping in a dairy.

Draw the following views:

5.1 Draw the given views NOT TO SCALE.

5.2 Calculate the true lengths to develop half of the pattern of the transition piece. Write the true lengths on the ANSWER SHEET provided.

5.3 Use the calculated true lengths and develop to scale 1 : 1, half of the pattern of the transition piece. The joints of the transition piece are shown at p7 and n1.

NOTE: Marks will NOT be awarded for lengths taken from the drawing to scale.

The completed drawing must clearly indicate all the construction lines. The following title and scale must be printed centrally below the finished drawing:

RECTANGLE-TO-CIRCLE TRANSITION PIECE
SCALE 1 : 1

[25]

TOTAL : 100

Copyright reserved

ANSWER SHEET **EXAMINATION NUMBER:**

QUESTION 5.2

Complete the table below. Write your EXAMINATION NUMBER in the space provided, detach the ANSWER SHEET from the question paper and hand it in together with the drawing paper.

The calculations must be done on the drawing paper.

CALCULATE	TRUE LENGTH	%
Arc length 1/12		1
n1		1
C1		1,5
C2		1,5
C3		1,5
C4		1,5
D4		1,5
D5		1,5
D6		1,5
D7		1,5
p7		1
TOTAL		**15**

Copyright reserved

DIAGRAM SHEET 1

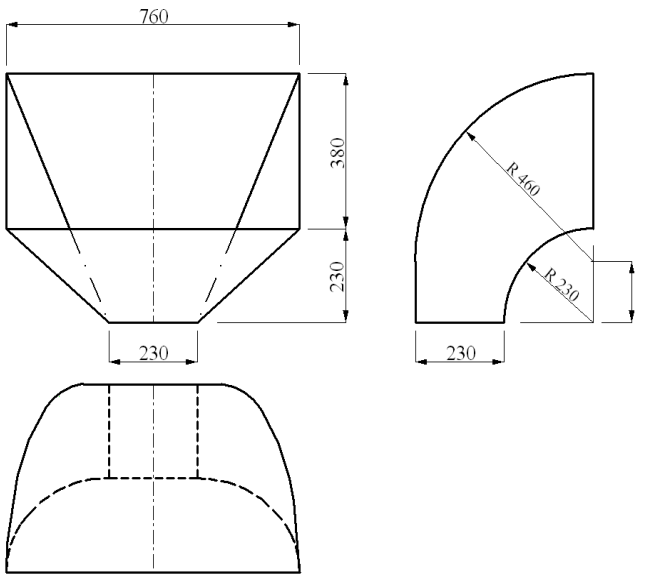

FIGURE 1

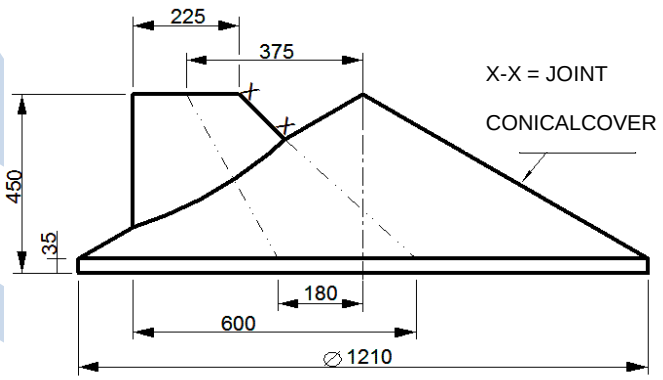

FIGURE 2

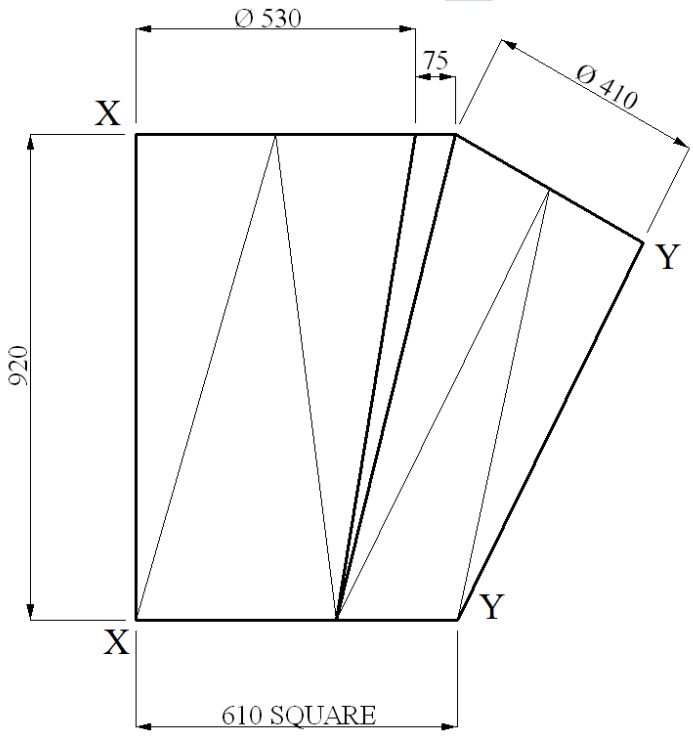

FIGURE 3

Copyright reserved

DIAGRAM SHEET 2

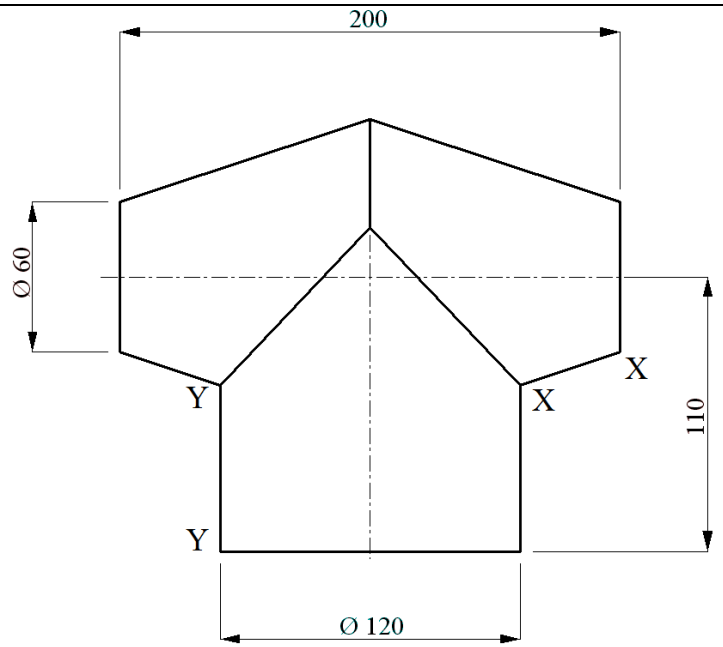

FIGURE 4

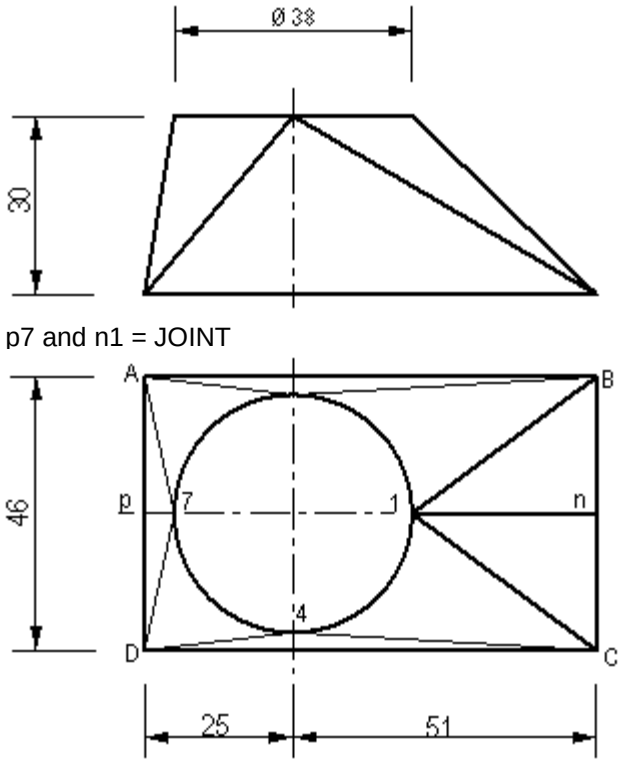

FIGURE 5

Copyright reserved