higher education & training

Department:
Higher Education and Training
REPUBLIC OF SOUTH AFRICA

MARKING GUIDELINE

NATIONAL CERTIFICATE

PLATING AND STRUCTURAL STEEL DRAWING N4

10 APRIL 2018

This marking guideline consists of 9 pages

Copyright reserved

QUESTION 1: FLARED VENTILATION HEAD

Front view	2
Left view	2
Top view without curves of sides	1
Curves of sides in top view	4
Pattern of back	3
Pattern of throat	3
Pattern of sides	6
Accuracy	1
Line work and projections	2
Neatness	1

.

[25]

QUESTION 2: OBLIQUE CONICAL CONNECTION ON CONICAL COVER

Front view	4
Top view	5
Line of penetration in front view	3
Pattern of oblique cone	9
Accuracy	1
Line work and projections	2
Neatness	1

[25]

QUESTION 3: SQUARE-TO-TWO-CIRCLES JUNCTION PIECE

Front view	3
Top view	5
Half of the pattern of the junction piece	13
Accuracy	1
Line work and projections	2
Neatness	1

[25]

Copyright reserved

QUESTION 4: TWO-POINT CONICAL NOZZLE

Front view	4
Construction of line of penetration	2
Pattern of one point of the nozzle	9
Half pattern of the right pipe	6
Accuracy	1
Line work and projections	2
Neatness	1

[25]

QUESTION 5: RECTANGLE-TO-CIRCLE TRANSITION PIECE

Front view (NOT TO SCALE)	1
Top view (NOT TO SCALE)	2
Calculations	15
Half of the pattern of the transition piece	5
Accuracy	1
Neatness	1

[25]

TOTAL : 100

QUESTION 1
FIGURE 1

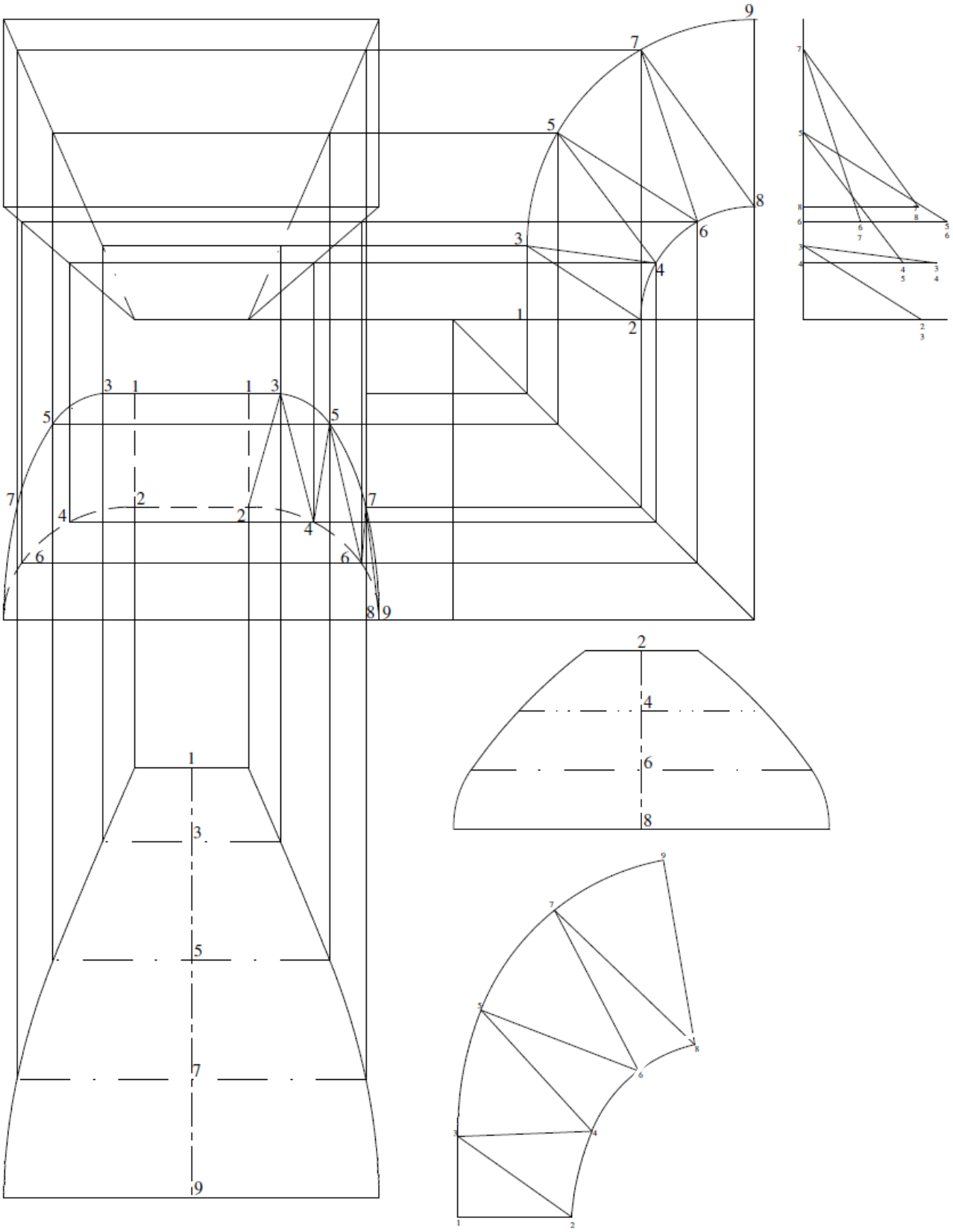

FLARED VENTILATION HEAD
SCALE 1 : 10

QUESTION 2
FIGURE 2

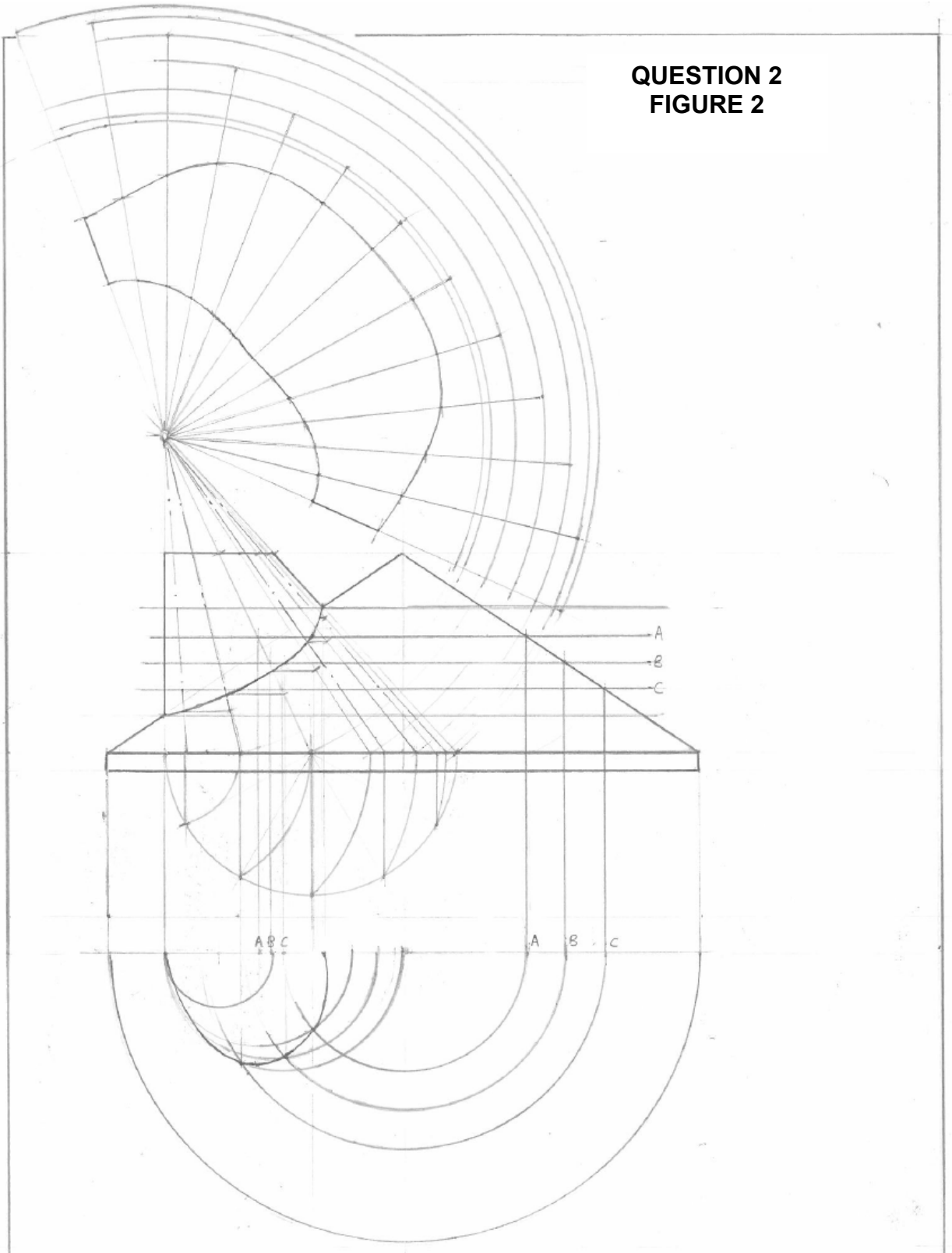

OBLIQUE CONICAL CONNECTION ON CONICAL COVER
SCALE 1 : 10

QUESTION 3
FIGURE 3

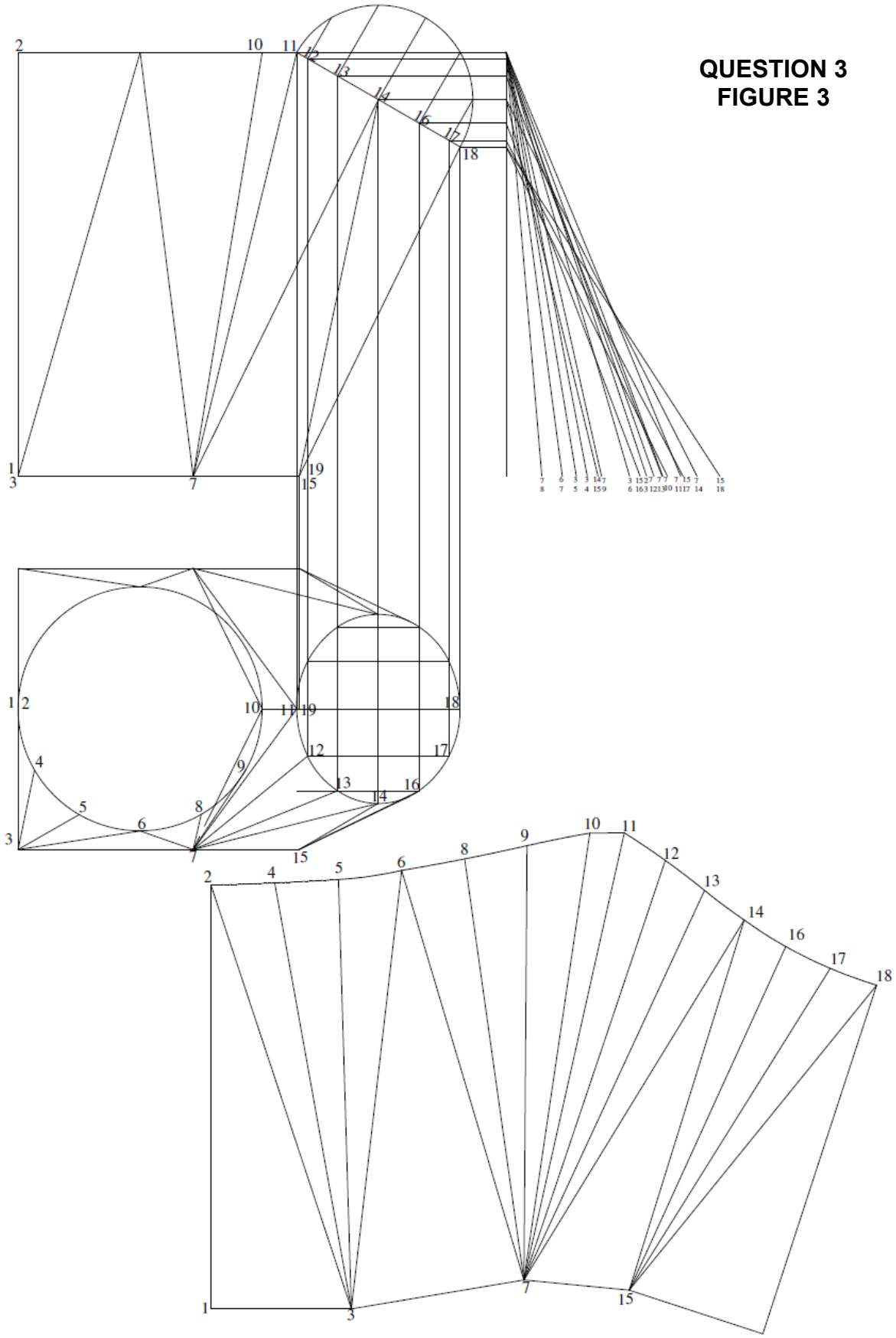

SQUARE-TO-TWO-CIRCLES JUNCTION PIECE
SCALE 1 : 10

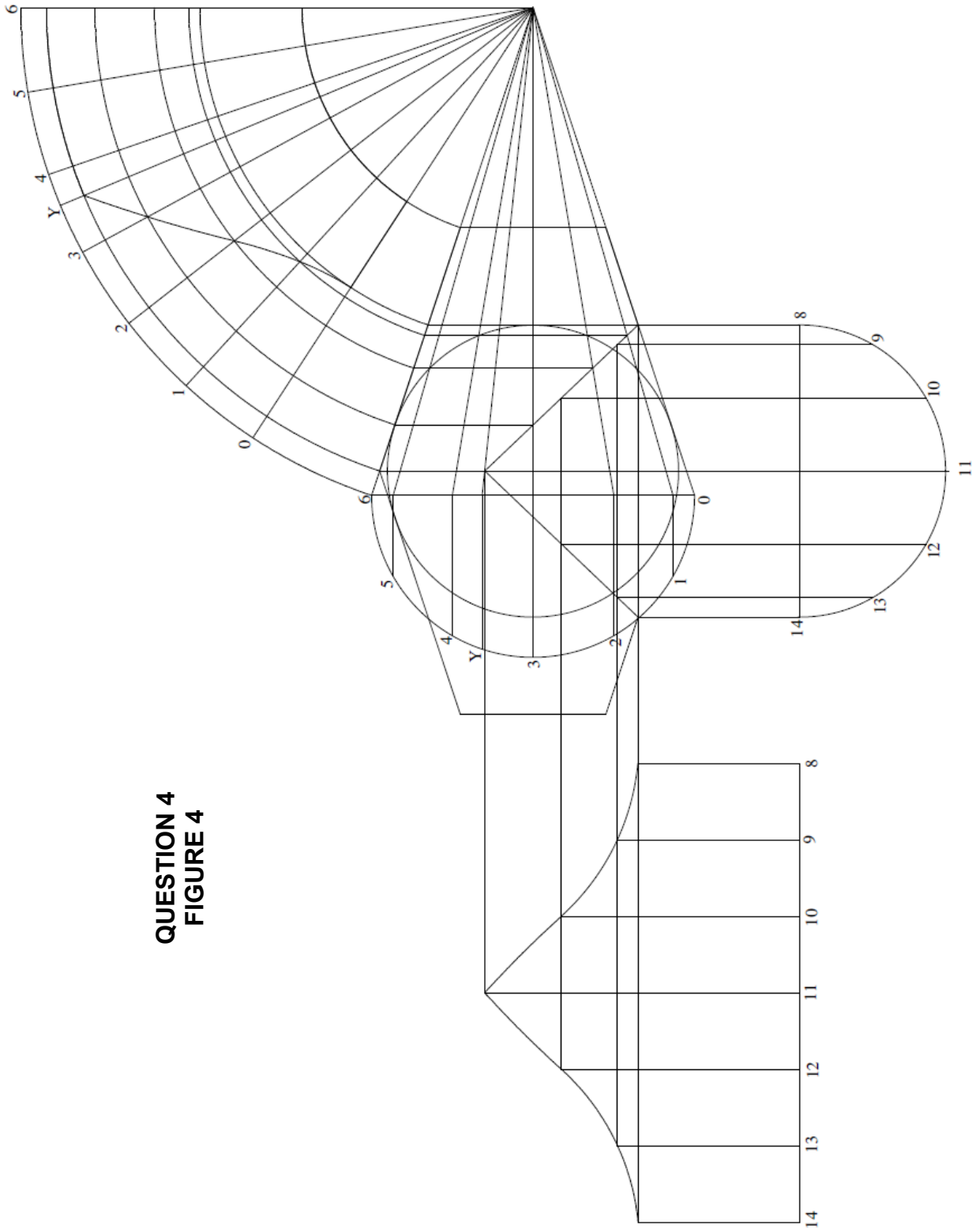

QUESTION 4
FIGURE 4

TWO-POINT CONICAL NOZZLE
SCALE 1 : 2

QUESTION 5
FIGURE 5

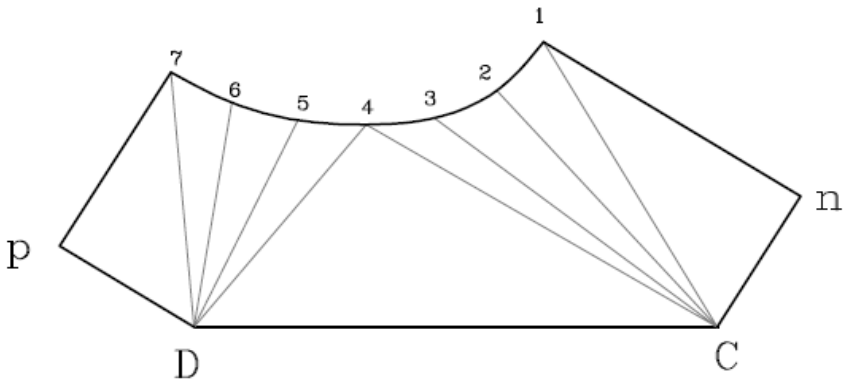

RECTANGLE-TO-CIRCLE TRANSITION PIECE
SCALE 1 : 1

QUESTION 5 **DIAGRAMS AND CALCULATIONS**

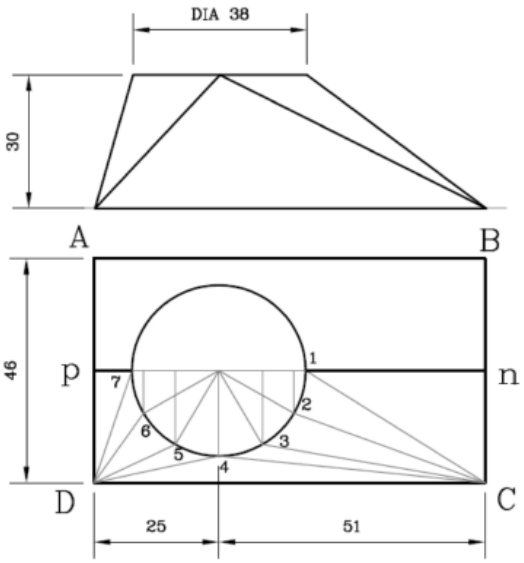

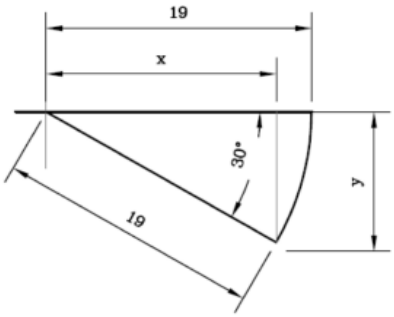

For 30°, $x = 19\ Cos\ 30° = 16.45$

And $y = 19\ Sin\ 30° = 9.5$

For 60°, $x = 19\ Cos\ 60° = 9.5$

And $y = 19\ Sin\ 60° = 16.45$

Arc Length 1-2, 2-3, ... $= \frac{\pi \times 38}{12} = 9.95$ [1]

1n = $\sqrt{(51-19)^2 + 30^2}$ = 43.86 [1]

C1 = $\sqrt{30^2 + (51-19)^2 + 23^2}$ = 49.53 [1.5]

C2 = $\sqrt{30^2 + (51-16.45)^2 + (23-9.5)^2}$ = 47.71 [1.5]

C3 = $\sqrt{30^2 + (51-9.5)^2 + (23-16.45)^2}$ = 51.63 [1.5]

C4 = $\sqrt{30^2 + 51^2 + (23-19)^2}$ = 59.3 [1.5]

D4 = $\sqrt{30^2 + 25^2 + (23-19)^2}$ = 39.26 [1.5]

D5 = $\sqrt{30^2 + (25-9.5)^2 + (23-16.45)^2}$ = 34.4 [1.5]

D6 = $\sqrt{30^2 + (25-16.45)^2 + (23-9.5)^2}$ = 34 [1.5]

D7 = $\sqrt{30^2 + (25-19)^2 + 23^2}$ = 38.25 [1.5]

7p = $\sqrt{(25-19)^2 + 30^2}$ = 30.6 [1]

[15]

TOTAL: 100

Copyright reserved