higher education & training

Department:
Higher Education and Training
REPUBLIC OF SOUTH AFRICA

NATIONAL CERTIFICATE

PLATING AND STRUCTURAL STEEL DRAWING N3

(8090113)

18 November 2020 (X-paper)
09:00–13:00

REQUIREMENTS: A2 drawing paper.

Calculators may be used.

This question paper consists of 7 pages.

145Q1E2018

Copyright reserved

DEPARTMENT OF HIGHER EDUCATION AND TRAINING
REPUBLIC OF SOUTH AFRICA

NATIONAL CERTIFICATE
PLATING AND STRUCTURAL STEEL DRAWING N3
TIME: 4 HOURS
MARKS: 100

INSTRUCTIONS AND INFORMATION

NOTE: If you answer more than the required FOUR questions, only the first four questions will be marked. All work you do not want to be marked must be clearly crossed out.

1. Answer any FOUR questions.
2. All the construction lines must be shown.
3. Do TWO questions on the front and TWO questions on the reverse side of the drawing sheet.
4. Number the answers correctly according to the numbering system used in this question paper.
5. Untidy work will be penalised.
6. Add a title and scale to each answer.
7. Write neatly and legibly.

Copyright reserved

QUESTION 1

FIGURE 1, Below shows the front view and top view of a hopper that is used in a grinding machine. Do the following.

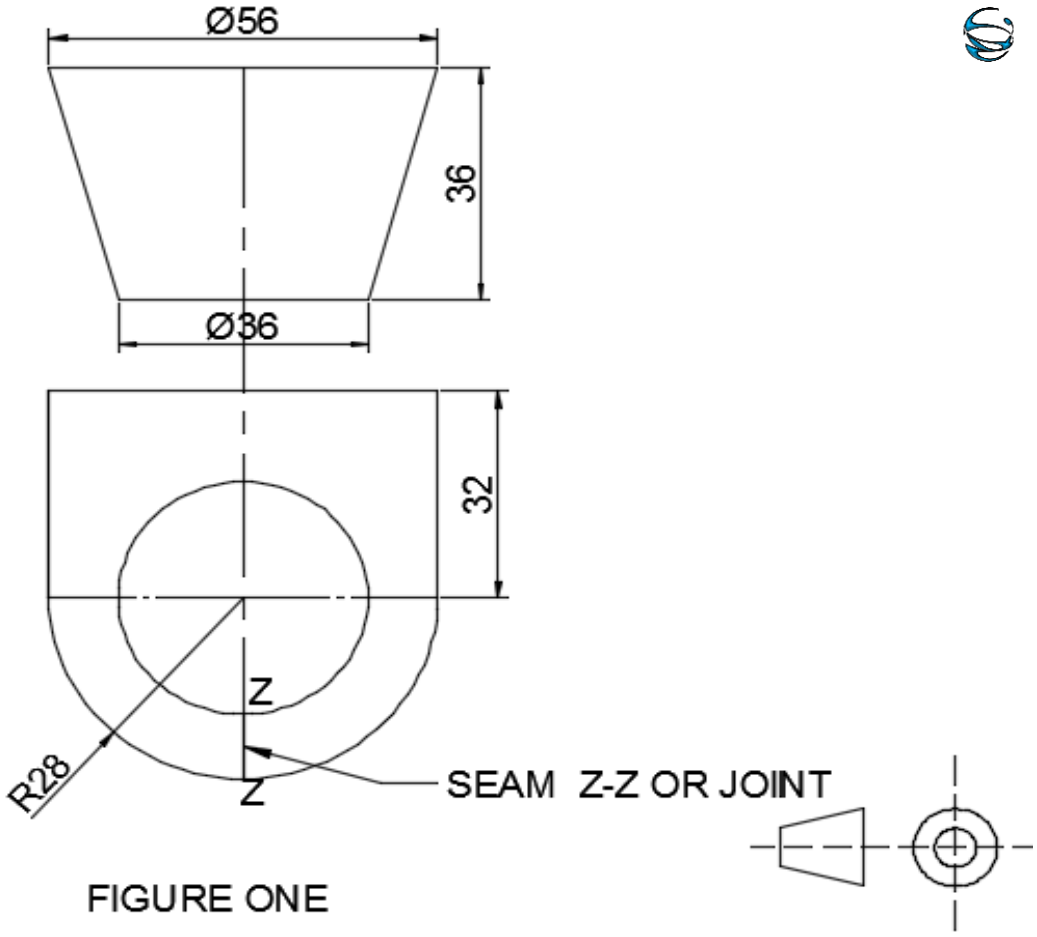

FIGURE ONE

1.1 Draw the given views. (2)

1.2 Calculate the true lengths of the bend lines.
All calculations must be done on the drawing sheet and in pencil. (10)

1.3 Use these true lengths to develop the symmetrical half pattern of the hopper. (9)

Note: No marks will be awarded for true lengths taken from the drawing to scale.

Mark allocation for, drawing office practice, for the above question is as follows:

Linework and Printing	(2)
Accuracy and Neatness	(2)
Scale 1:1	**[25]**

Copyright reserved

QUESTION 2

FIGURE TWO below, shows the front elevation and top view of one revolution of a spiral blade. Do the following:

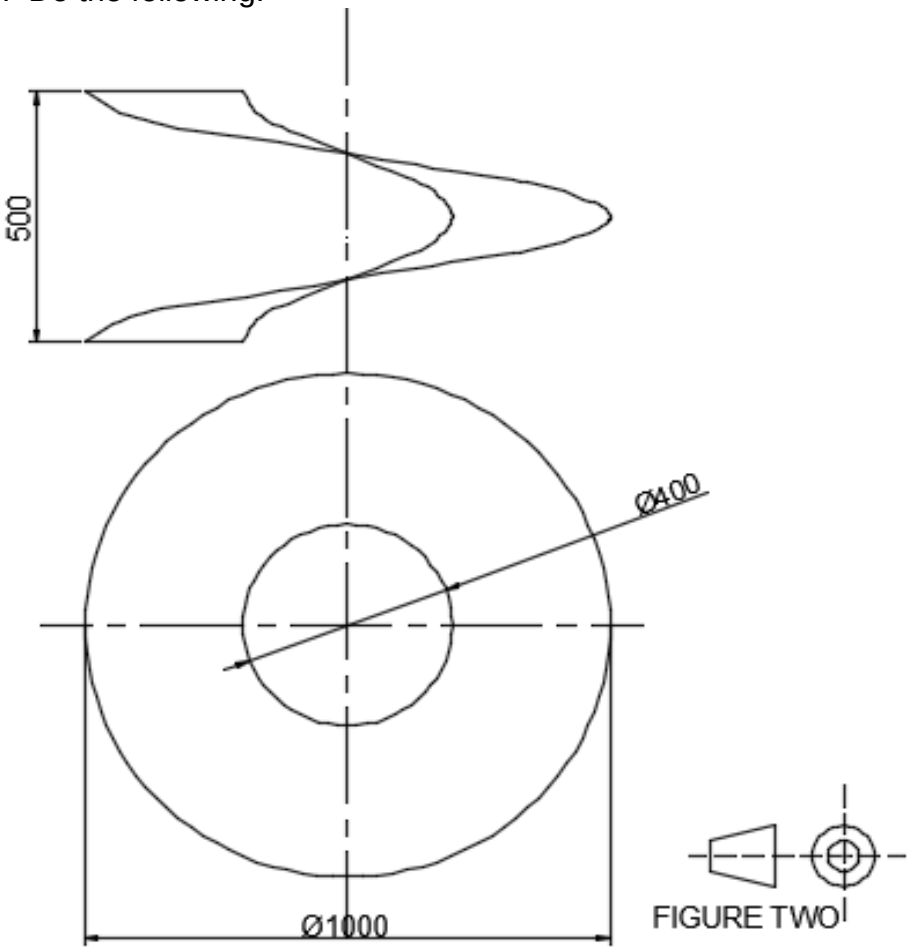

FIGURE TWO

2.1 Draw the top view (1)

2.2 Construct and plot the front view showing the construction lines. (5)

2.3 Construct the true lengths showing the construction lines. (4)

2.4 Develop the shape of the plate required to form the blades. (8)

Mark allocation for, drawing office practice, for the above question is as follows:

Accuracy and Neatness (4)
Linework (3)
Scale 1:10 **[25]**

Copyright reserved

QUESTION 3

The figure three below, shows two views of an oblique T-piece with a square branch pipe.

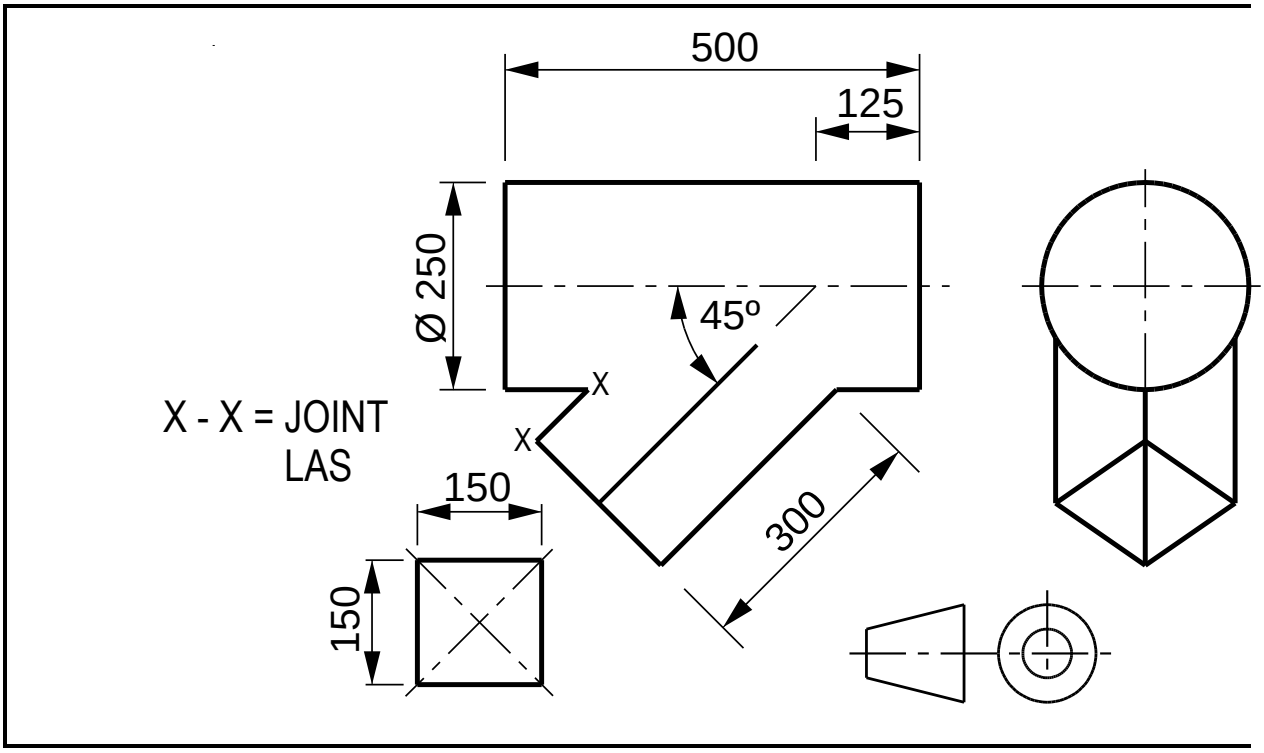

FIGURE 3

3.1 Draw the given two views. (2)

3.2 Determine the penetration line. (6)

3.3 Develop the pattern of the branch pipe. (6)

3.4 Develop the shape of the hole in the cylindrical pipe. (6)

Mark allocation for, drawing office practice, for the above question is as follows:
Accuracy and Neatness (2)
Linework (3)
Scale 1:5 **[25]**

Copyright reserved

QUESTION 4

FIGURE 4 below shows the front and top view of a hopper.

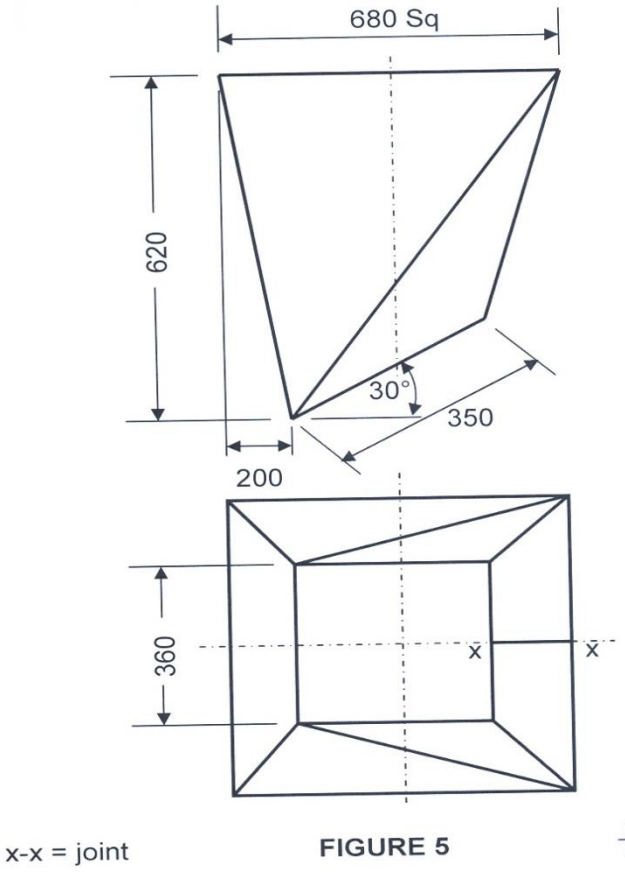

FIGURE 4

4.1 Draw the given views of the hopper. (4)

4.2 Develop the shape of the plate required to form the hopper. (10)

4.3 Construct a template for the angle of the kink. (5)

Mark allocation for, drawing office practice, for the above question is as follows:

Linework	(2)
Accuracy	(2)
Neatness	(1)
Title and scale	(1)
	[25]

Copyright reserved

QUESTION 5

The figure five below, shows the front view of a bolted connection.

Draw, to scale 1:5, in first-angle orthographic projection:

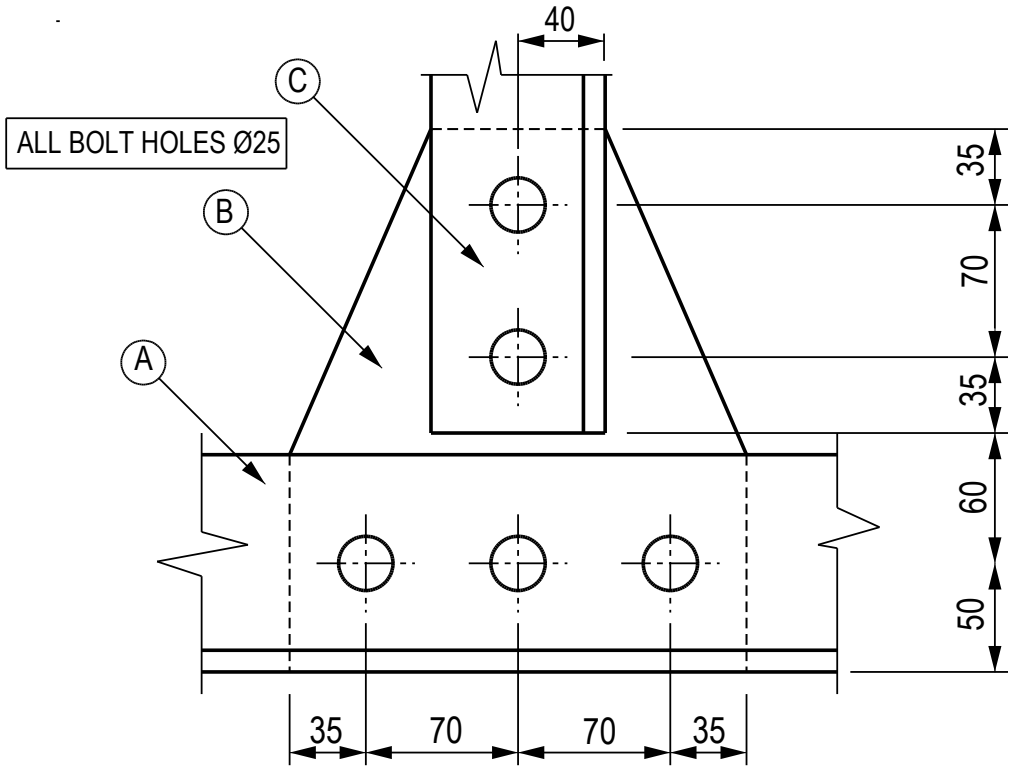

FIGURE 5

5.1 The given front view (4)

5.2 The left view (7)

5.3 The top view (7)

Mark allocation for, drawing office practice, for the above question is as follows:

Dimensions (2)
Linework (3)
Projection symbol (1)

Print the title, BOLTED CONNECTION, and the scale centred beneath the views (1)

General notes:

Item A: 100 × 100 × 10 angle iron – 2 off required (back to back)
Item B: 10 mm-thick gusset plate – 1 off required
Item C: 80 × 80 × 10 angle iron – 2 off required (back to back) **[25]**
Should probably be 2 **of** required, 1 **of** required – I translated as such

TOTAL: 100

Copyright reserved