higher education & training

Department:
Higher Education and Training
REPUBLIC OF SOUTH AFRICA

MARKING GUIDELINE

NATIONAL CERTIFICATE

PLATING AND STRUCTURAL STEEL DRAWING N3

18 November 2020

This marking guideline consists of 9 pages.

NOTE: THE MARKING GUIDELINE IS NOT TO SCALE AND DURING MARKING GUIDLEINE DISCUSSION AND MARKING THE ORIGINALS AND THERMALS HAVE TO BE USED

Copyright reserved

✓ = mark √ = ½ mark

QUESTION 1

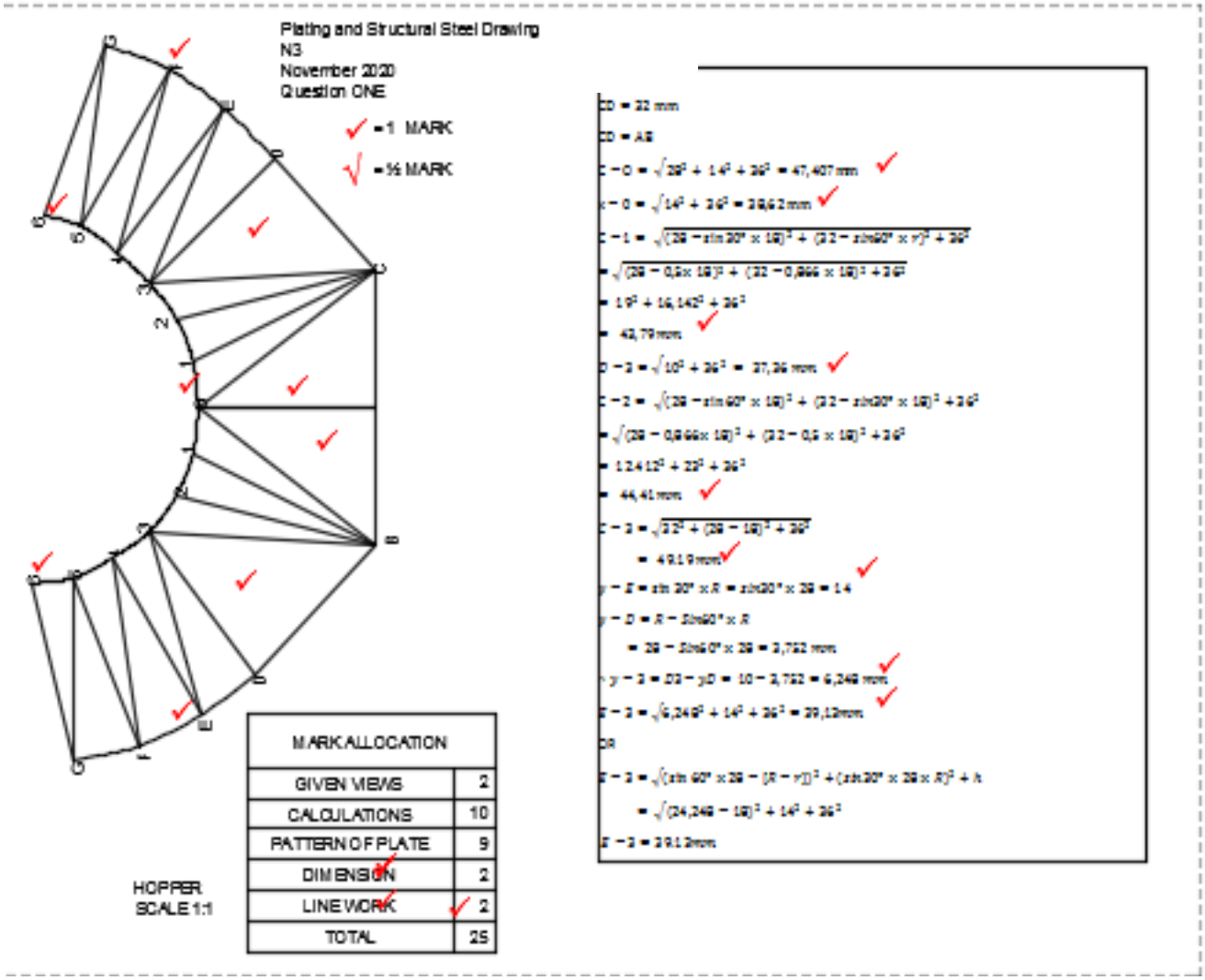

MARK ALLOCATION	
GIVEN VIEWS	2
CALCULATIONS	10
PATTERN OF PLATE	9
DIMENSION	2
LINE WORK	2
TOTAL	25

[25]

QUESTION 2

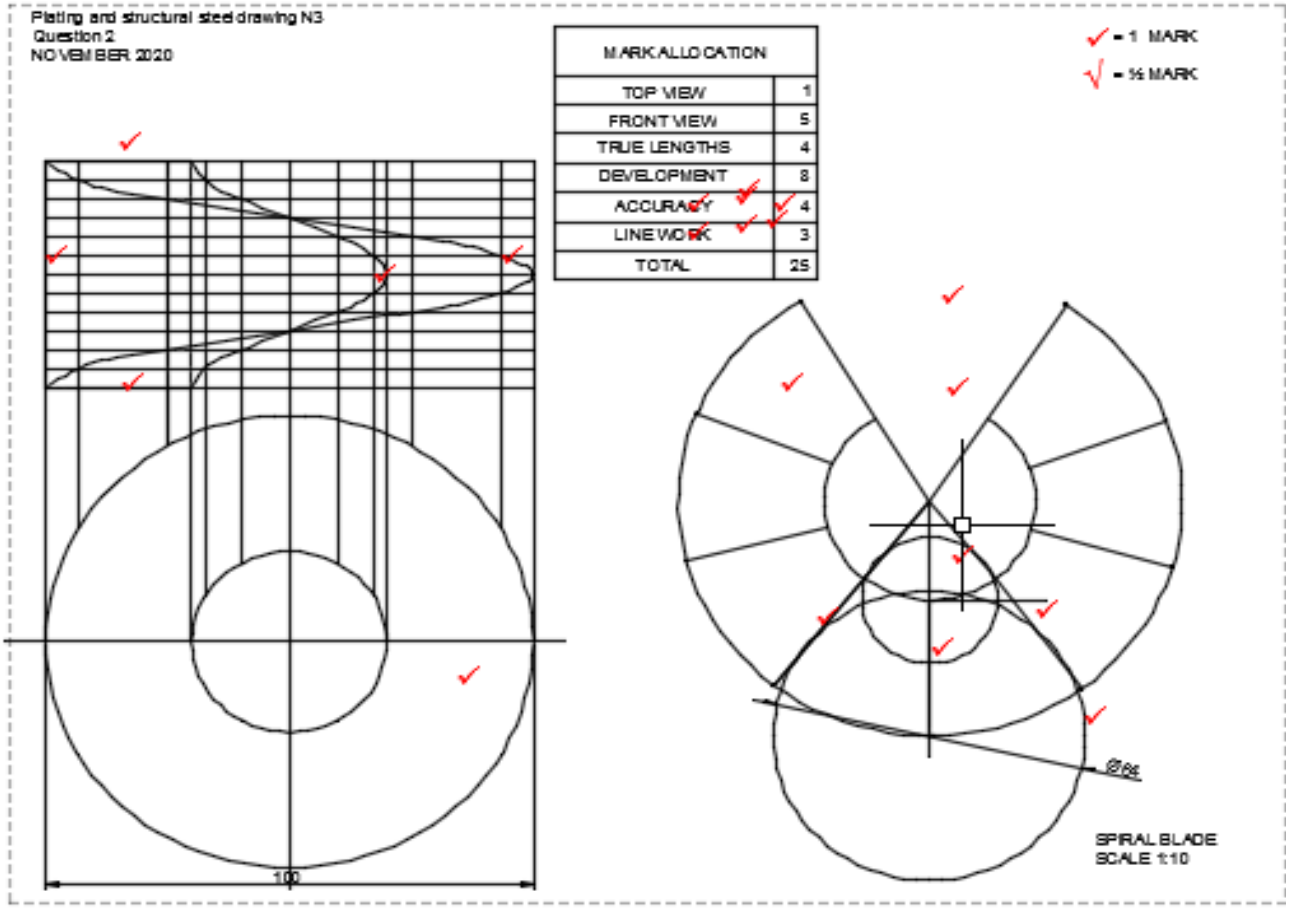
Plating and structural steel drawing N3
Question 2
NOVEMBER 2020
MARK ALLOCATION
TOP VIEW 1
FRONT VIEW 5
TRUE LENGTHS 4
DEVELOPMENT 8
ACCURACY 4
LINEWORK 3
TOTAL 25
✓ = 1 MARK
√ = ½ MARK
100
Ø84
SPIRAL BLADE
SCALE 1:10

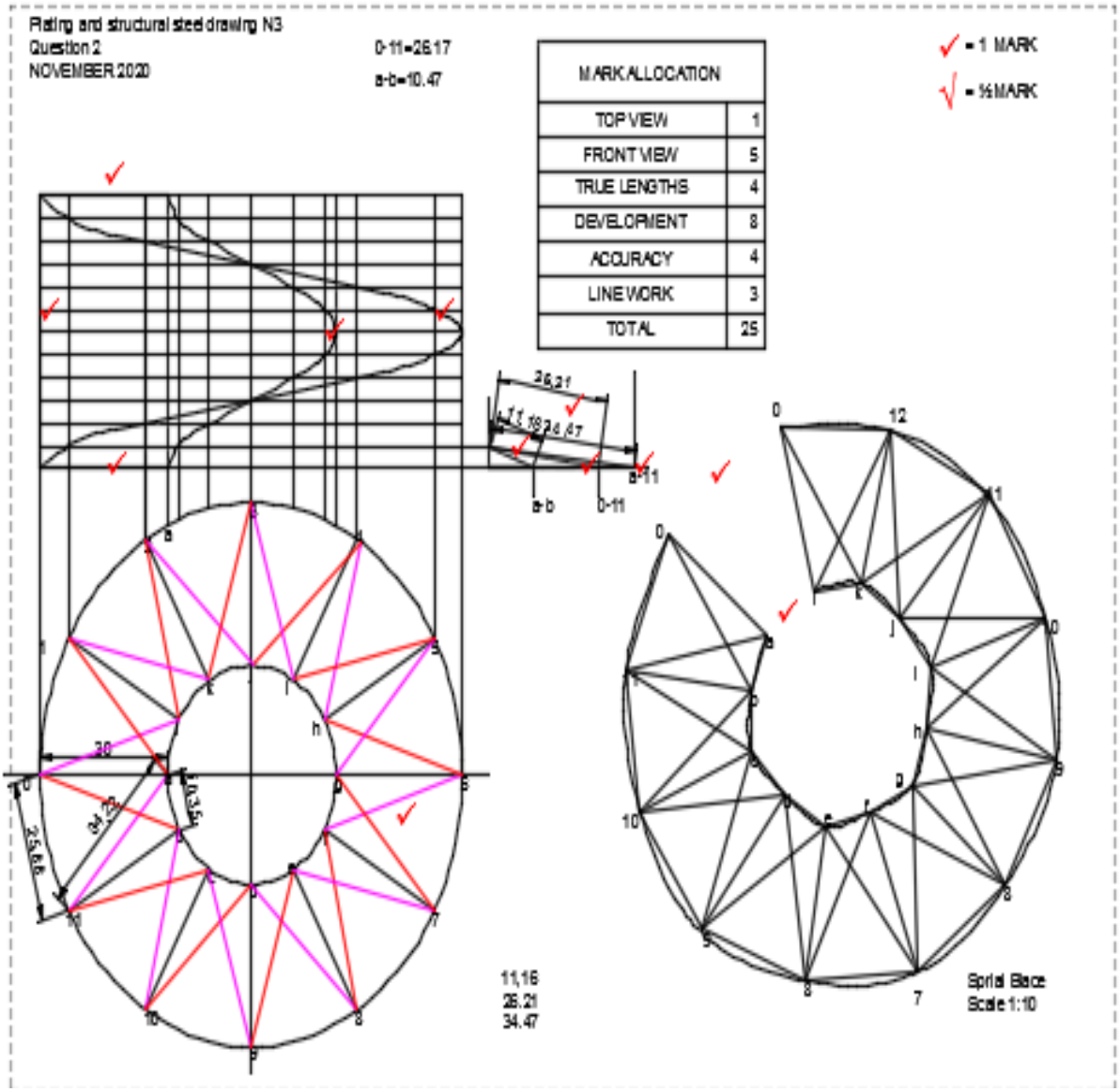

Copyright reserved

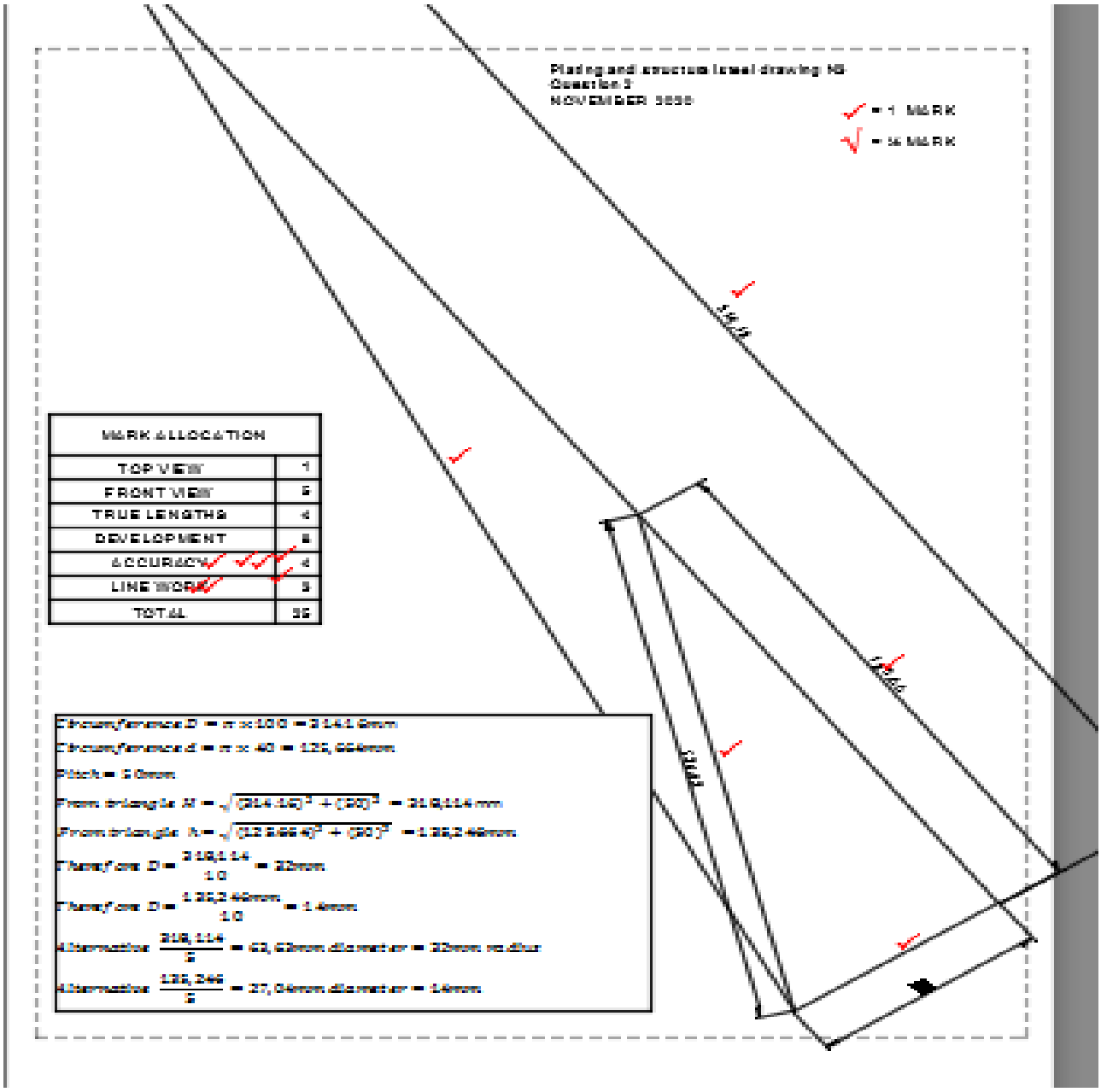
Plating and structural steel drawing N3
Question 3
NOVEMBER 2020
✓ = 1 MARK
√ = ½ MARK
MARK ALLOCATION
TOP VIEW 7
FRONT VIEW 5
TRUE LENGTHS 4
DEVELOPMENT 8
ACCURACY 4
LINE WORK 3
TOTAL 35
Circumference D = π x 100 = 314,16mm
Circumference d = π x 40 = 125,664mm
Pitch = 20mm
From triangle N = √((314,16)² + (20)²) = 314,916 mm
From triangle h = √((125,664)² + (20)²) = 125,248mm
Therefore D = 314,16 / 10 = 32mm
Therefore D = 125,248mm / 10 = 14mm
Alternative 314,16 / 10 = 62,83mm diameter = 32mm radius
Alternative 125,248 / 10 = 27,04mm diameter = 14mm

[25]

QUESTION 3

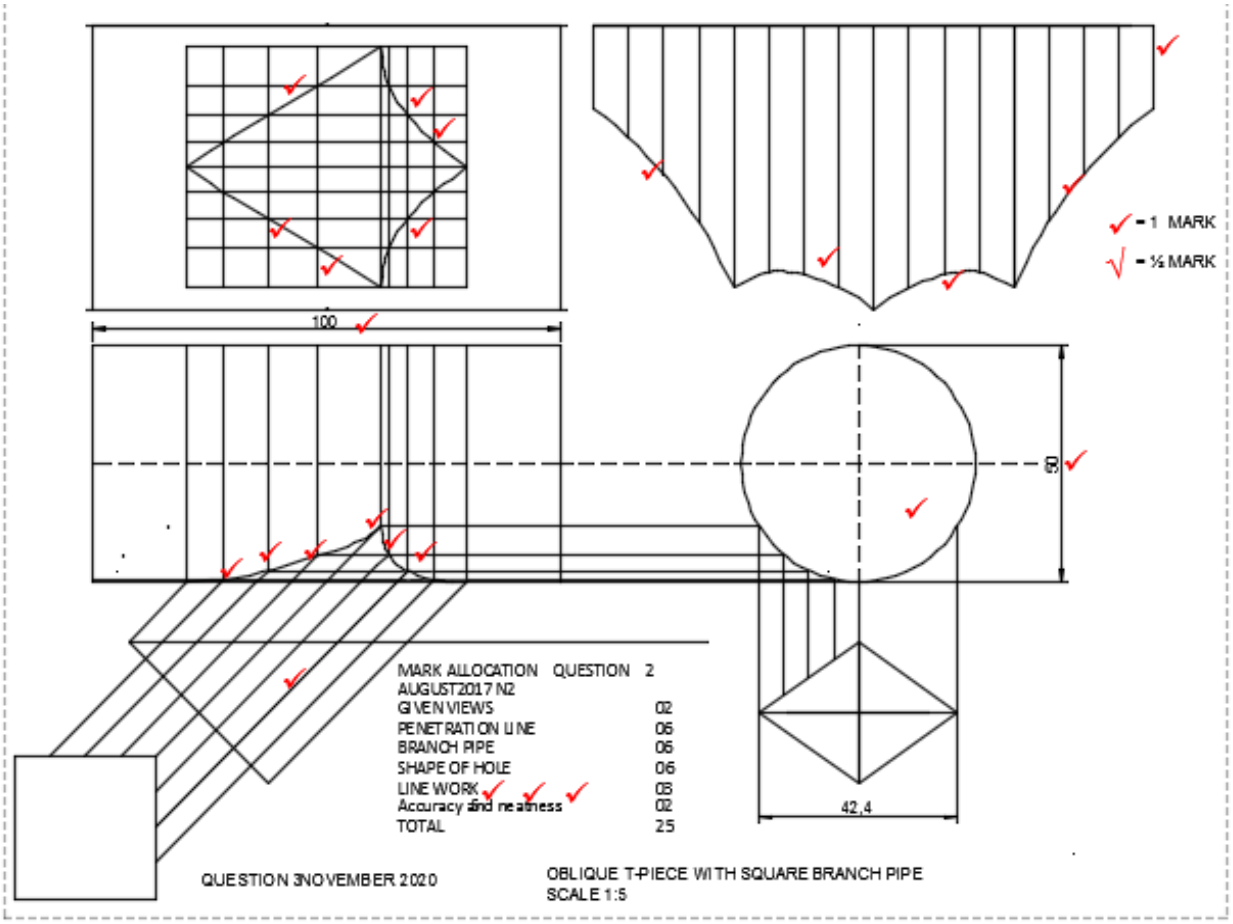
✓ = 1 MARK
√ = ½ MARK
100
60
42,4
MARK ALLOCATION QUESTION 2
AUGUST2017 N2
GIVEN VIEWS 02
PENETRATION LINE 06
BRANCH PIPE 06
SHAPE OF HOLE 06
LINE WORK 05
Accuracy and neatness 02
TOTAL 25
QUESTION 3NOVEMBER 2020
OBLIQUE T-PIECE WITH SQUARE BRANCH PIPE
SCALE 1:5

QUESTION 4

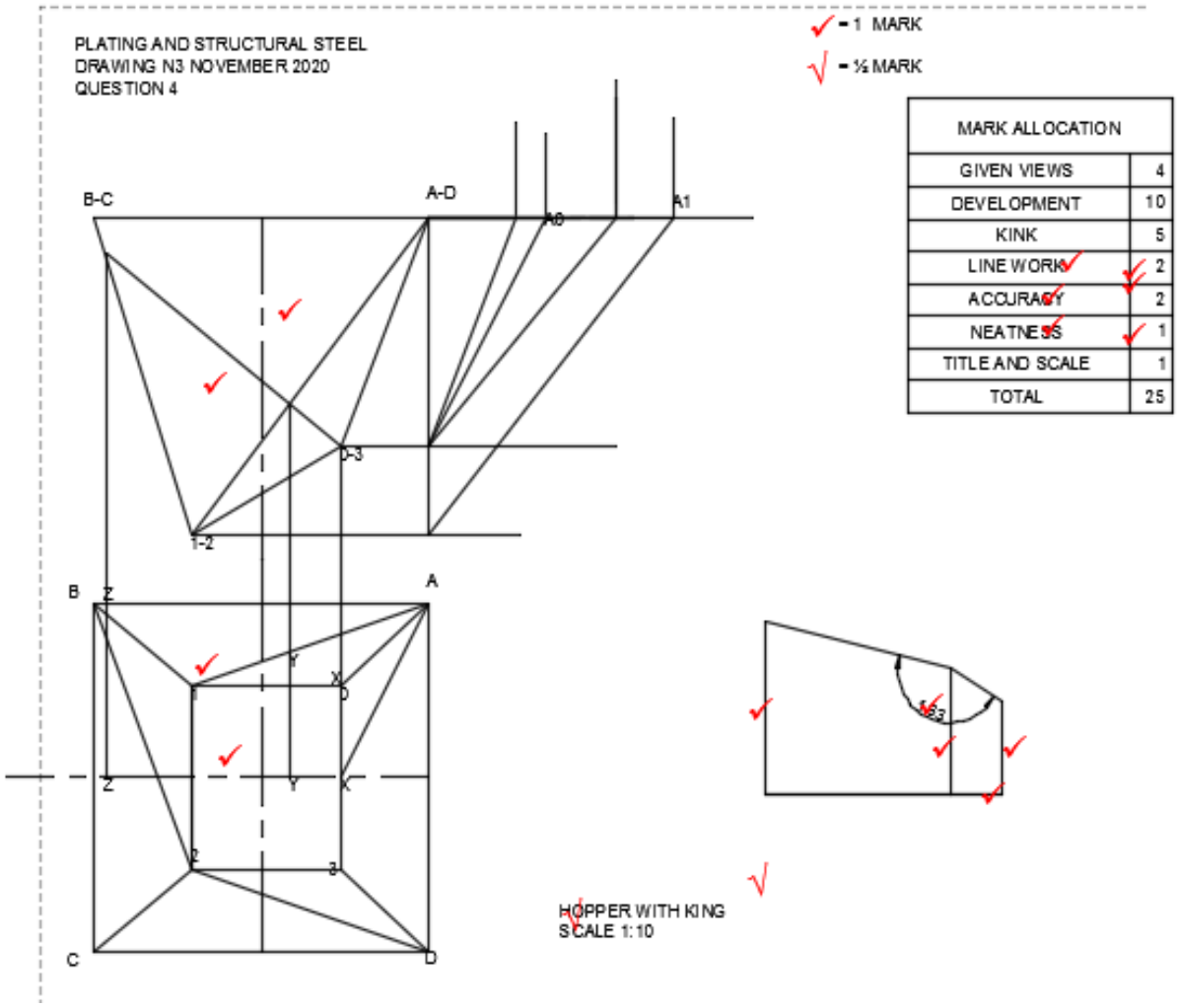
PLATING AND STRUCTURAL STEEL
DRAWING N3 NOVEMBER 2020
QUESTION 4
✓ = 1 MARK
√ = ½ MARK
MARK ALLOCATION
GIVEN VIEWS 4
DEVELOPMENT 10
KINK 5
LINE WORK 2
ACCURACY 2
NEATNESS 1
TITLE AND SCALE 1
TOTAL 25
B-C
A-D
A1
A0
D-3
1-2
B
Z
A
Y
X
D
Z
Y
X
2
3
C
D
HOPPER WITH KING
SCALE 1:10

PLATING AND STRUCTURAL STEEL
DRAWING N3 NOVEMBER 2020
QUESTION 4

✓ = 1 MARK
√ = ½ MARK

MARK ALLOCATION	
GIVEN VIEWS	4
DEVELOPMENT	10
KINK	5
LINE WORK	2
ACCURACY	2
NEATNESS	1
TITLE AND SCALE	1
TOTAL	25

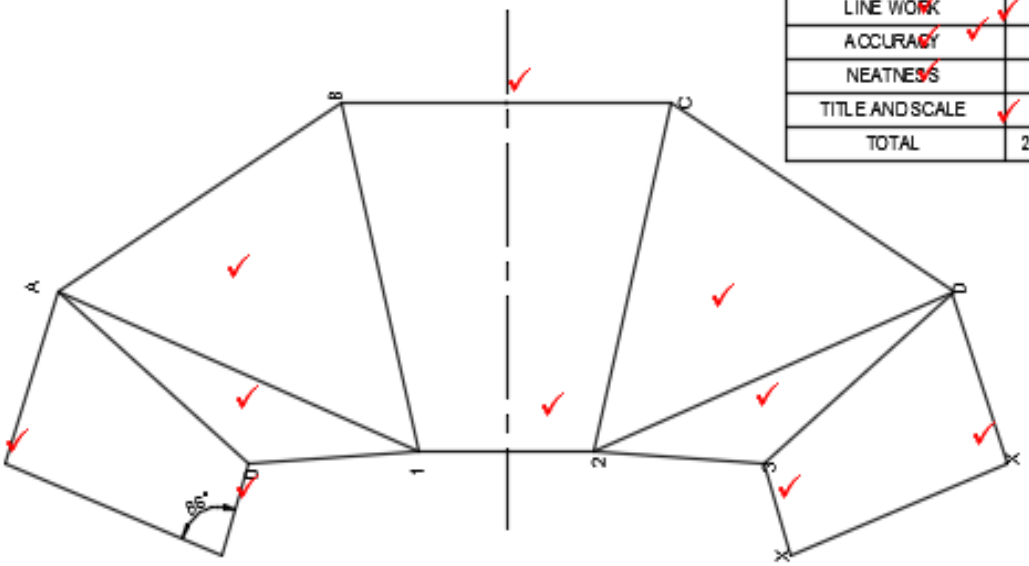

HOPPER WITH KING
SCALE 1:10

[25]

Copyright reserved

QUESTION 5

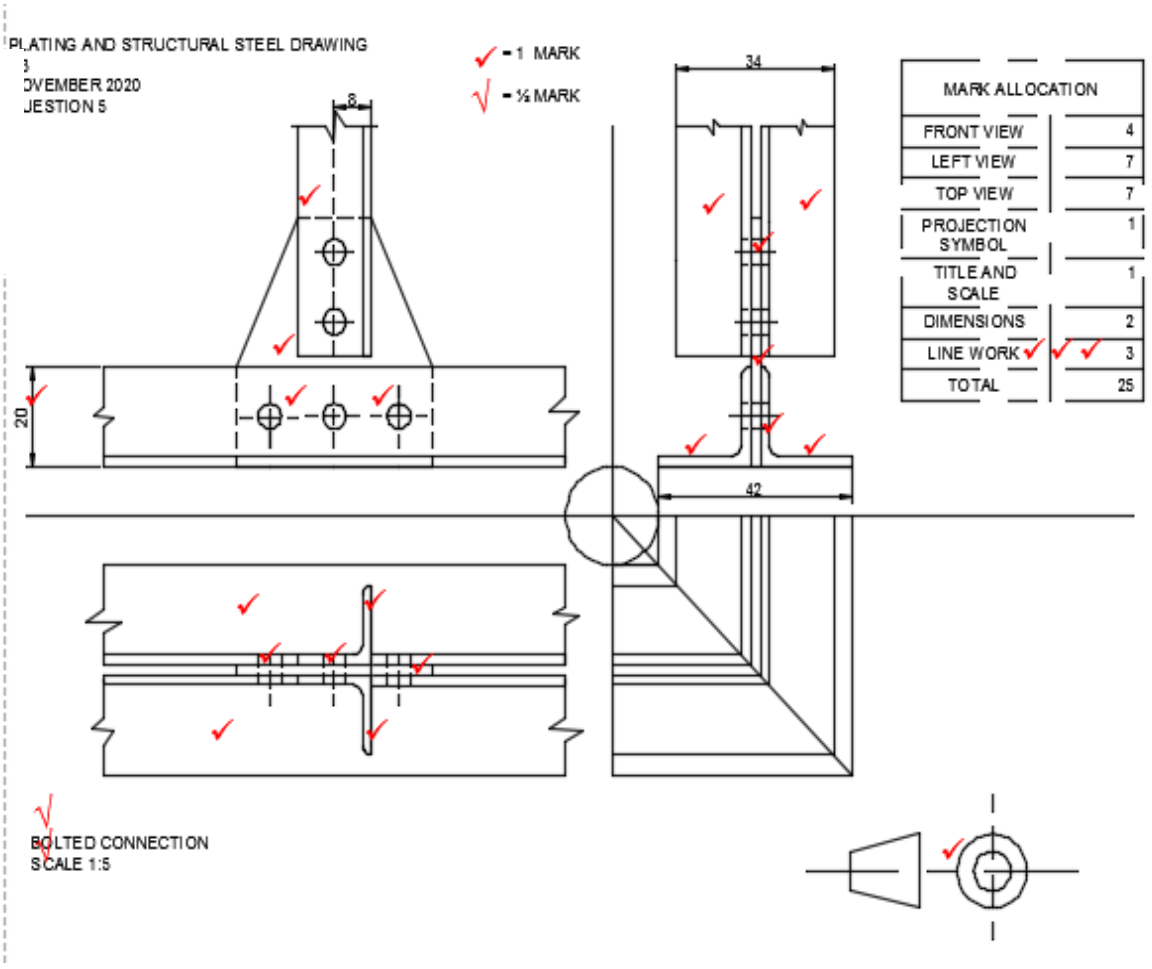

[25]

TOTAL: 100

Copyright reserved