higher education & training

Department:
Higher Education and Training
REPUBLIC OF SOUTH AFRICA

NATIONAL CERTIFICATE

PLATING AND STRUCTURAL STEEL DRAWING N3

(8090113)

27 July 2021 (X-paper)
09:00–13:00

REQUIREMENTS: ONE A2 drawing sheet

Drawing instruments and nonprogrammable calculators may be used.

This question paper consists of 5 pages and 5 diagram sheets.

056Q1G2127

Copyright reserved

DEPARTMENT OF HIGHER EDUCATION AND TRAINING
REPUBLIC OF SOUTH AFRICA

NATIONAL CERTIFICATE
PLATING AND STRUCTURAL STEEL DRAWING N3
TIME: 4 HOURS
MARKS: 100

NOTE: If you answer more than the required number of questions only the required number will be marked. Clearly cross out all work you do not want to be marked.

INSTRUCTIONS AND INFORMATION

1. Answer any FOUR questions.
2. Read all the questions carefully.
3. Number the answers according to the numbering system used in this question paper.
4. Use both sides of the A2 DRAWING SHEET.
5. Show all construction lines.
6. Print the title and scale below each drawing.
7. Work neatly.

Copyright reserved

QUESTION 1

FIGURE 1, DIAGRAM SHEET 1 shows two views of a square-to-round transition piece.

- Draw the given views to scale 1:1. (2)
- Calculate the true lengths, showing all calculations on the DRAWING SHEET. (14)
- Use the calculations and develop the pattern of the frustum. (6)

Linework (2)

Accuracy (1)

NOTE: No marks will be awarded for true lengths taken from the drawing to scale. **[25]**

AND/OR

QUESTION 2

FIGURE 2, DIAGRAM SHEET 2 shows the front and top view of a hopper.

- Use scale 1:10 and draw the given views. (4)
- Develop the template for the kink. (5)
- Develop the shape of the plate required for the hopper. (11)

Linework (2)

Accuracy (2)

Title and scale (1)

[25]

Copyright reserved

AND/OR

QUESTION 3

FIGURE 3, DIAGRAM SHEET 3 shows a tapered lobster-back bend.

- Use the common central sphere method and draw the tapered lobster-back bend to scale 1:10. (12)
- Develop the pattern of segment M. (6)

Linework (3)

Accuracy (3)

Title and scale (1)

[25]

AND/OR

QUESTION 4

FIGURE 4, DIAGRAM SHEET 4 shows the front and top view of a 90° sloping chute.

- Draw the top view to scale 1:10. (1)
- Construct the front view. (5)
- Develop the throat pattern B showing the true length. (4)
- Develop the heel pattern C showing the true length. (4)
- Develop the pattern for the bottom plate A. (8)

Line work (2)

Accuracy (1)

[25]

Copyright reserved

AND/OR

QUESTION 5

FIGURE 5, DIAGRAM SHEET 5 shows an oblique T-piece consisting of two unequal pipes.

- Draw the given views to scale 1:5. (4)
- Determine the interpenetration line by construction. (3)
- Determine the shape of the hole in the main. (6)
- Develop the pattern of the plate to manufacture the branch pipe. (8)

Line work (2)

Accuracy (2)

[25]

TOTAL: 100

Copyright reserved

PLATING AND STRUCTURAL STEEL DRAWING N3

DAIGRAM SHEET 1

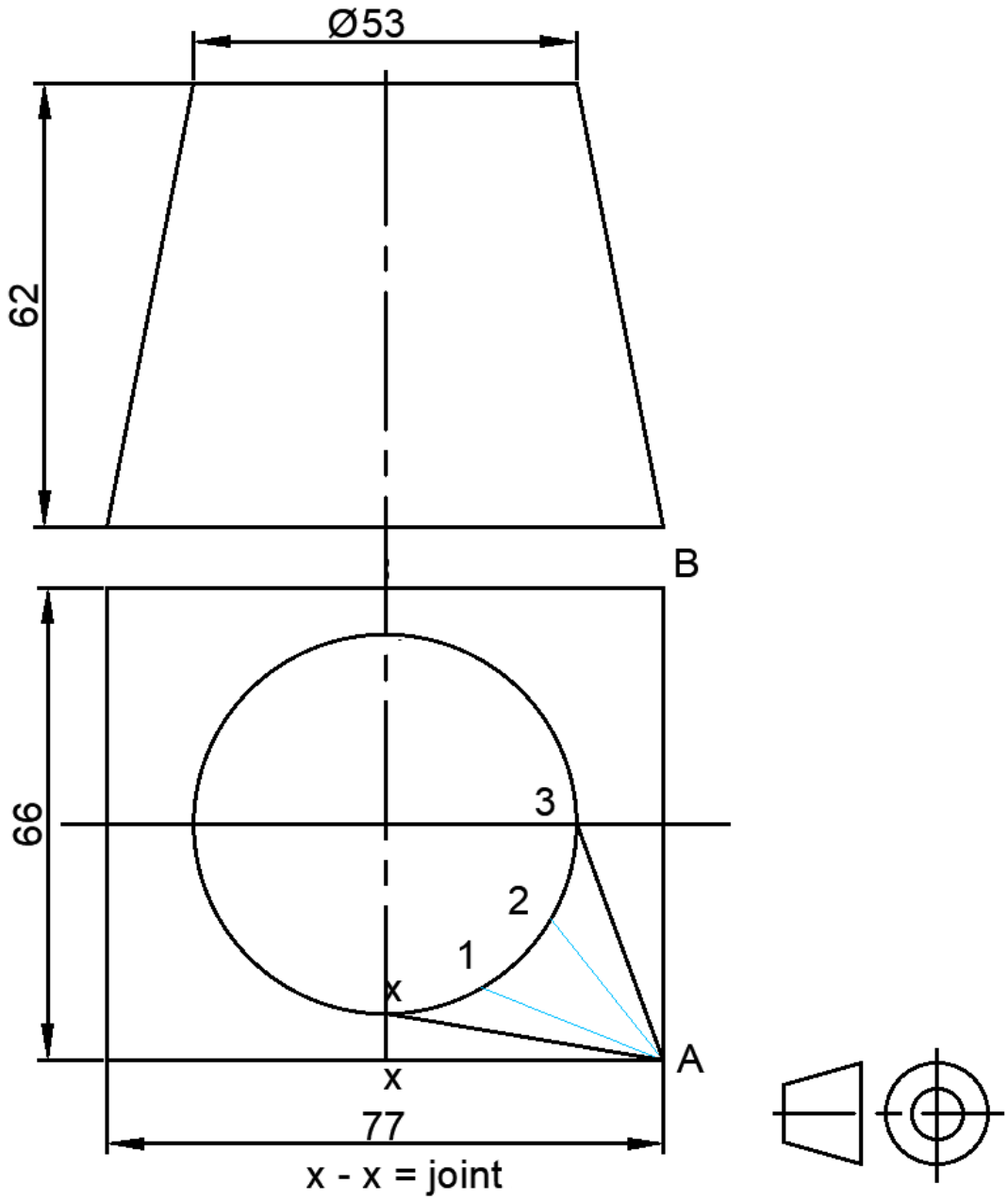

FIGURE 1

Copyright reserved

PLATING AND STRUCTURAL STEEL DRAWING N3

DIAGRAM SHEET 2

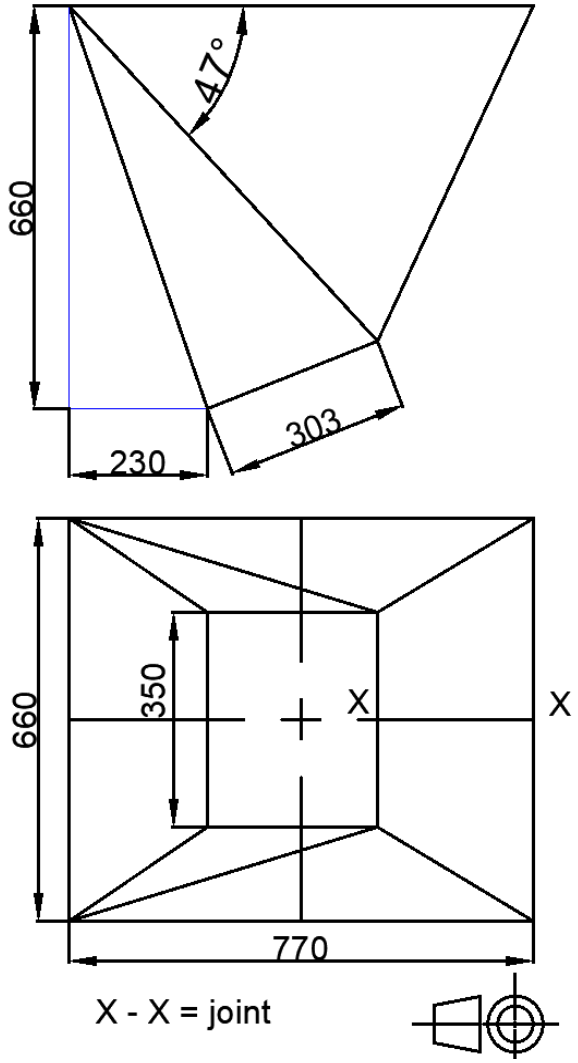

FIGURE 2

Copyright reserved

PLATING AND STRUCTURAL STEEL DRAWING N3

DIAGRAM SHEET 3

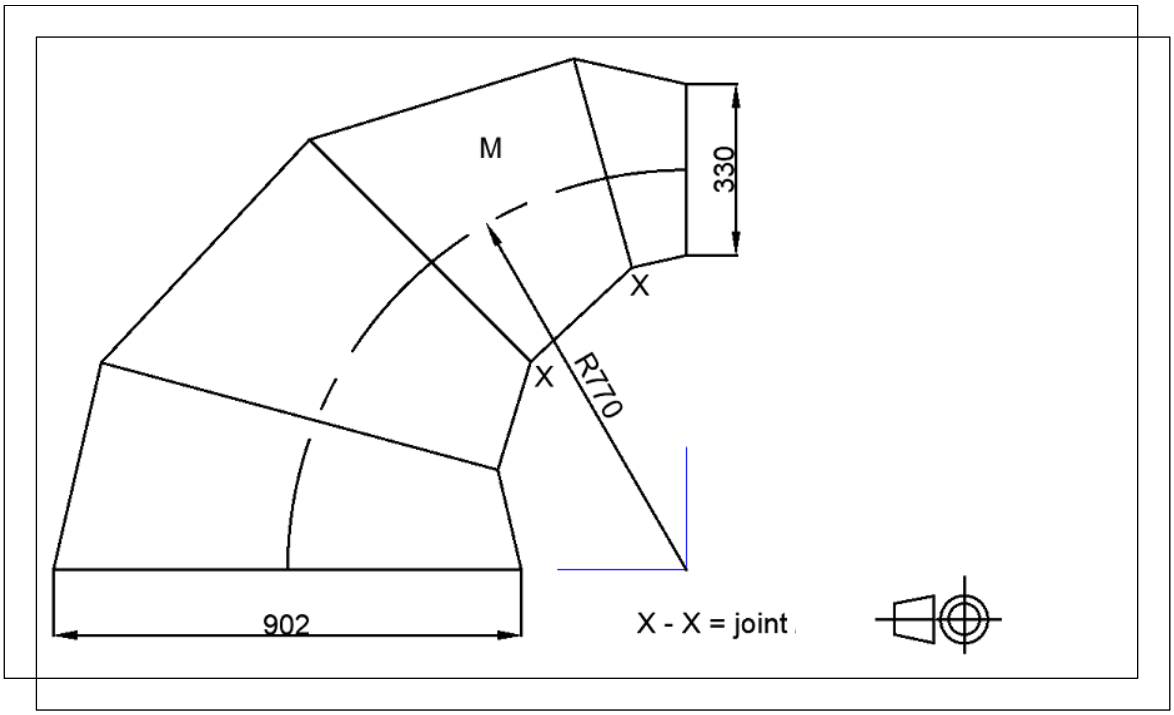

FIGURE 3

Copyright reserved

PLATING AND STRUCTURAL STEEL DRAWING N3

DIAGRAM SHEET 4

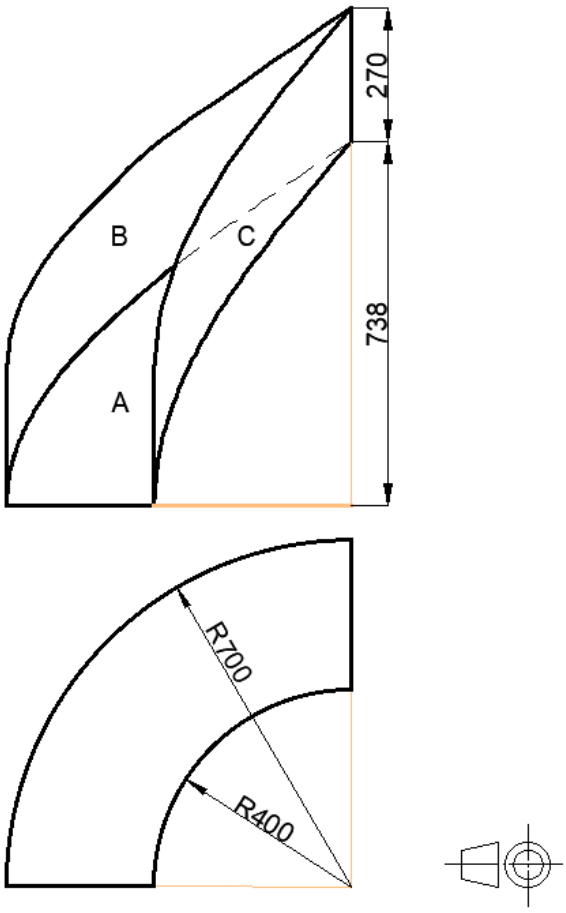

FIGURE 4

PLATING AND STRUCTURAL STEEL DRAWING N3

DIAGRAM SHEET 5

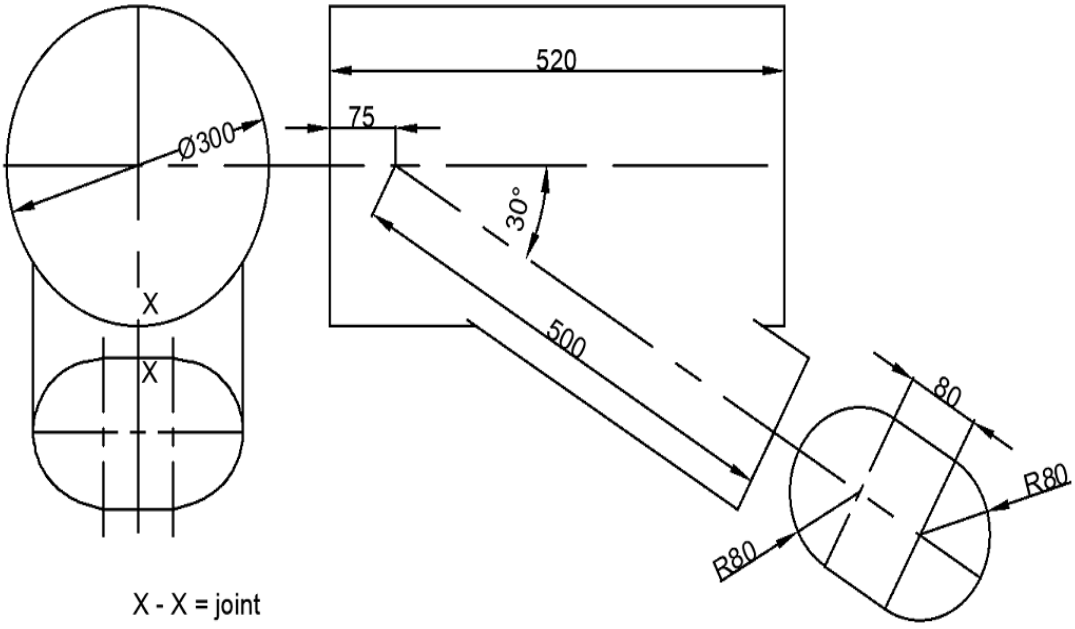

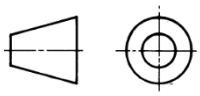

FIGURE 5

Copyright reserved