higher education & training

Department:
Higher Education and Training
REPUBLIC OF SOUTH AFRICA

MARKING GUIDELINE

NATIONAL CERTIFICATE

PLATING AND STRUCTURAL STEEL DRAWING N3

27 July 2021

This marking guideline consists of 6 pages.

HD

NOTE: THE DRAWINGS IN THE MARKING GUIDELINE ARE NOT TO SCALE. MARKERS SHOULD PREPARE THEIR ONW TEMPLATES.

Copyright reserved

QUESTION 1

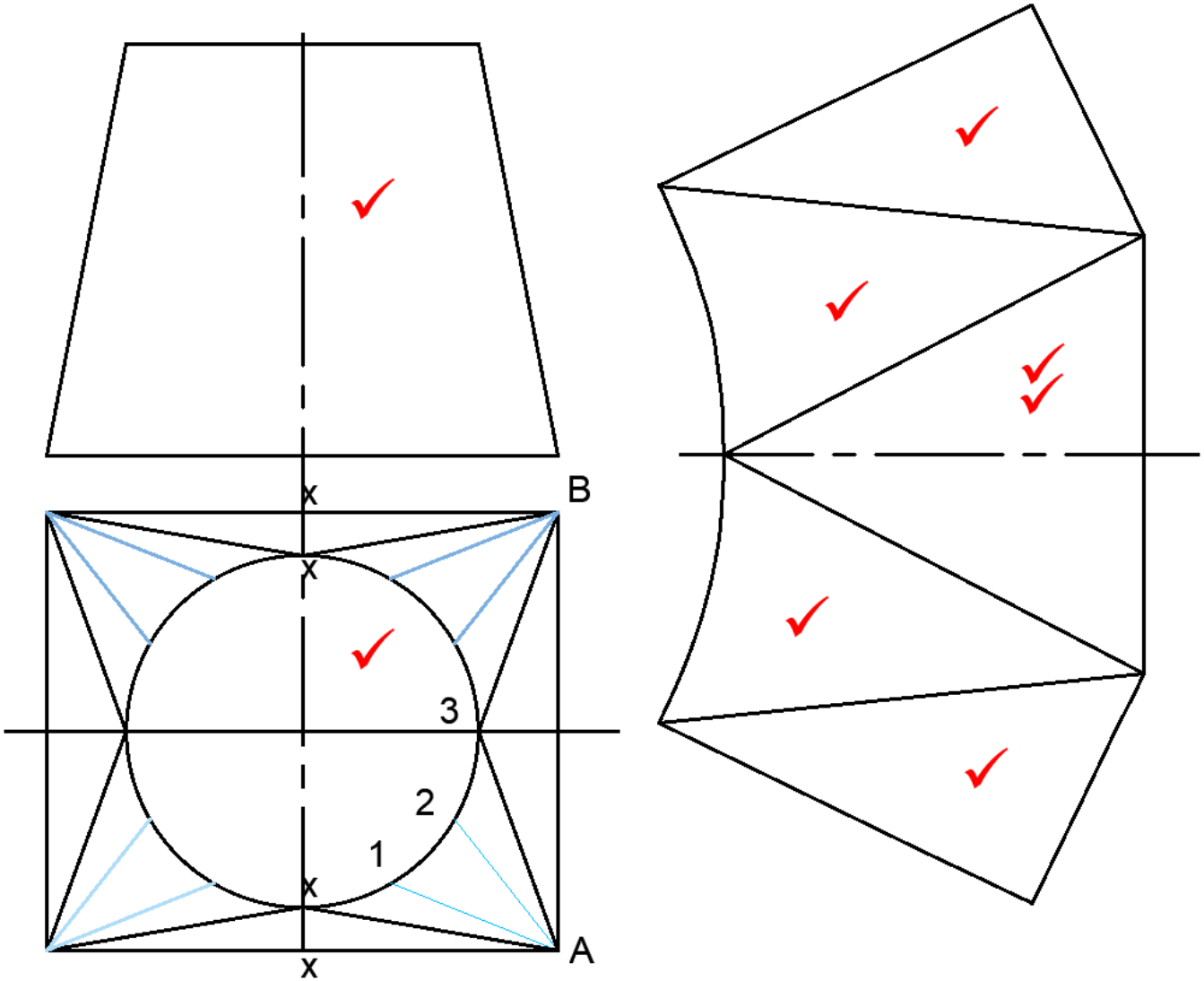

SQUARE-TO-ROUND TRANSITION PIECE
SCALE 1:1

Arc length	13.88	1
X-X	62.34	2
A-X	73.27	2
A-1	67.70	3
A-2	66.90	3
A-3	71.25	2
X-A	38.50	1
TOTAL		14

Correctness	22	
Linework	2	S&C
Accuracy	1	GV
TOTAL	25	

[25]

Copyright reserved

QUESTION 2

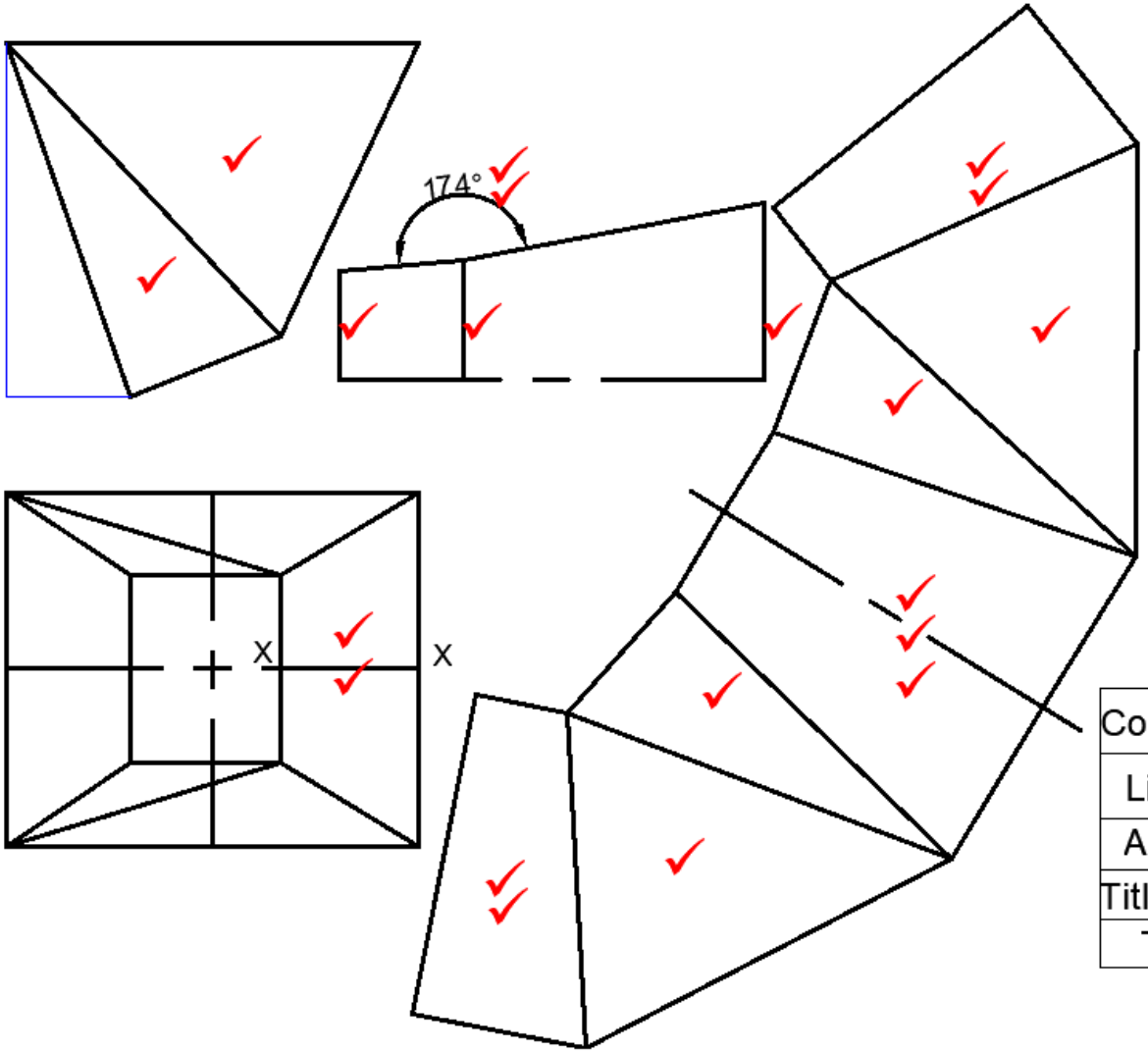

Correctness	20	
Linework	2	S&C
Accuracy	2	GV
Title & scale	1	
TOTAL	25	

FRONT AND TOP VIEW OF HOPPER SCALE 1:10 **[25]**

Copyright reserved

QUESTION 3

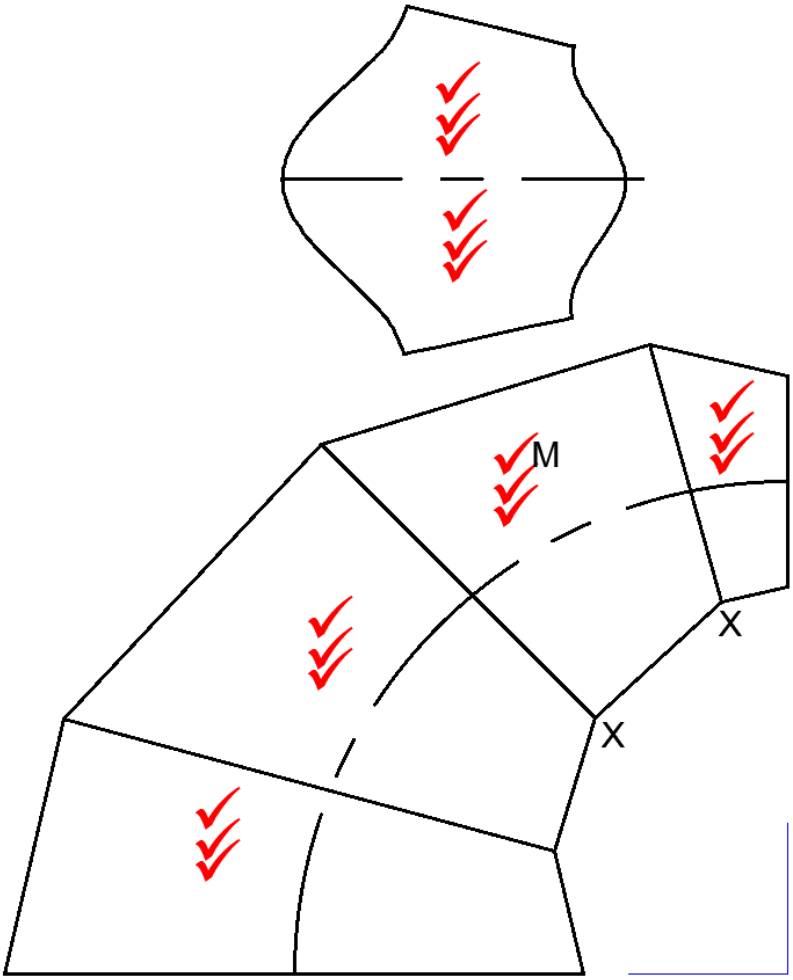

Correctness	18	
Linework	3	S&C
Accuracy	3	GV
Title & scale	1	
TOTAL	25	

TAPERED LOBSTER-BACK BEND
SCALE 1:10

[25]

Copyright reserved

QUESTION 4

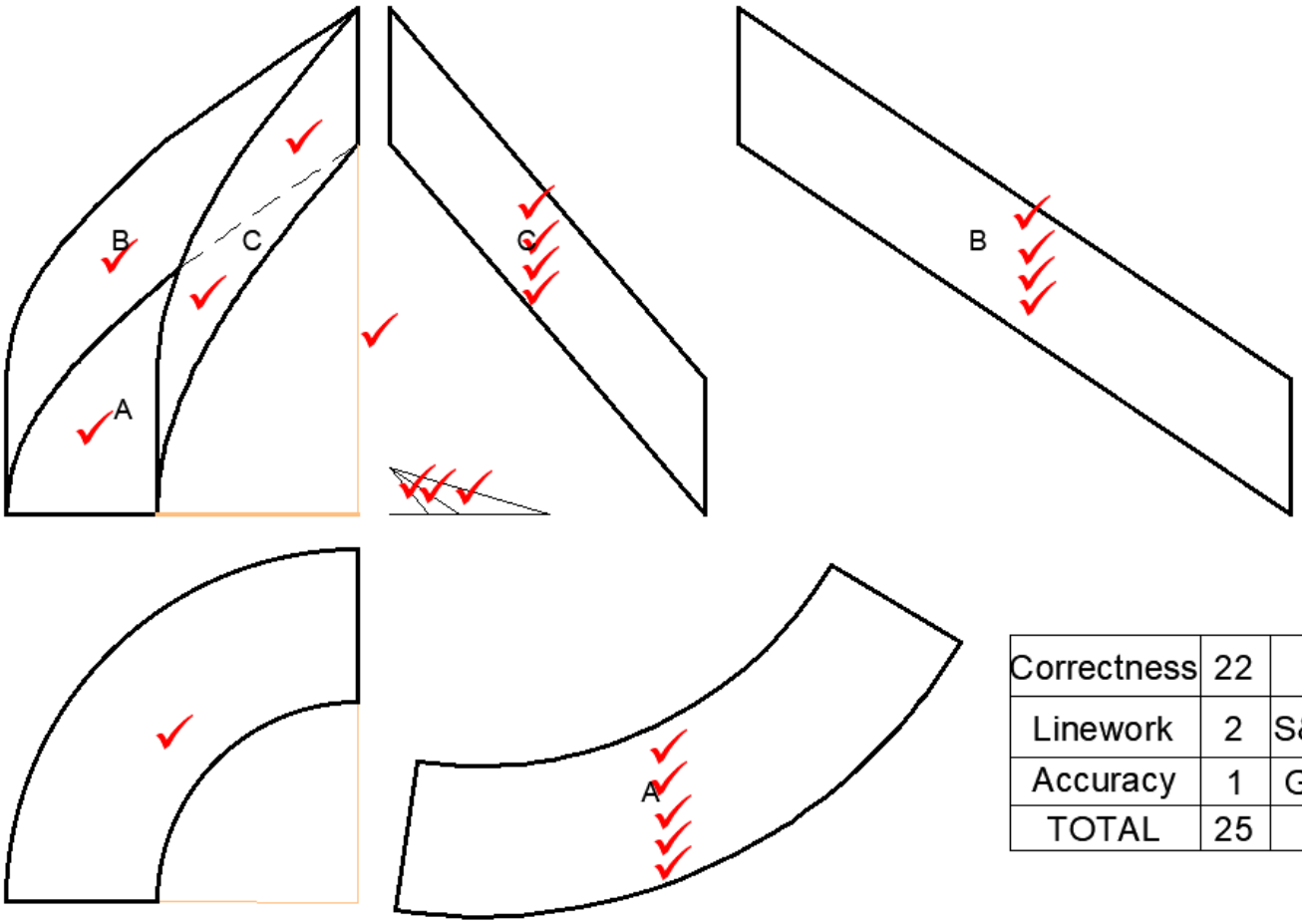

Correctness	22	
Linework	2	S&D
Accuracy	1	GV
TOTAL	25	

FRONT AND TOP VIEW OF SLOPING CHUTE
SCALE 1:10

[25]

Copyright reserved

QUESTION 5

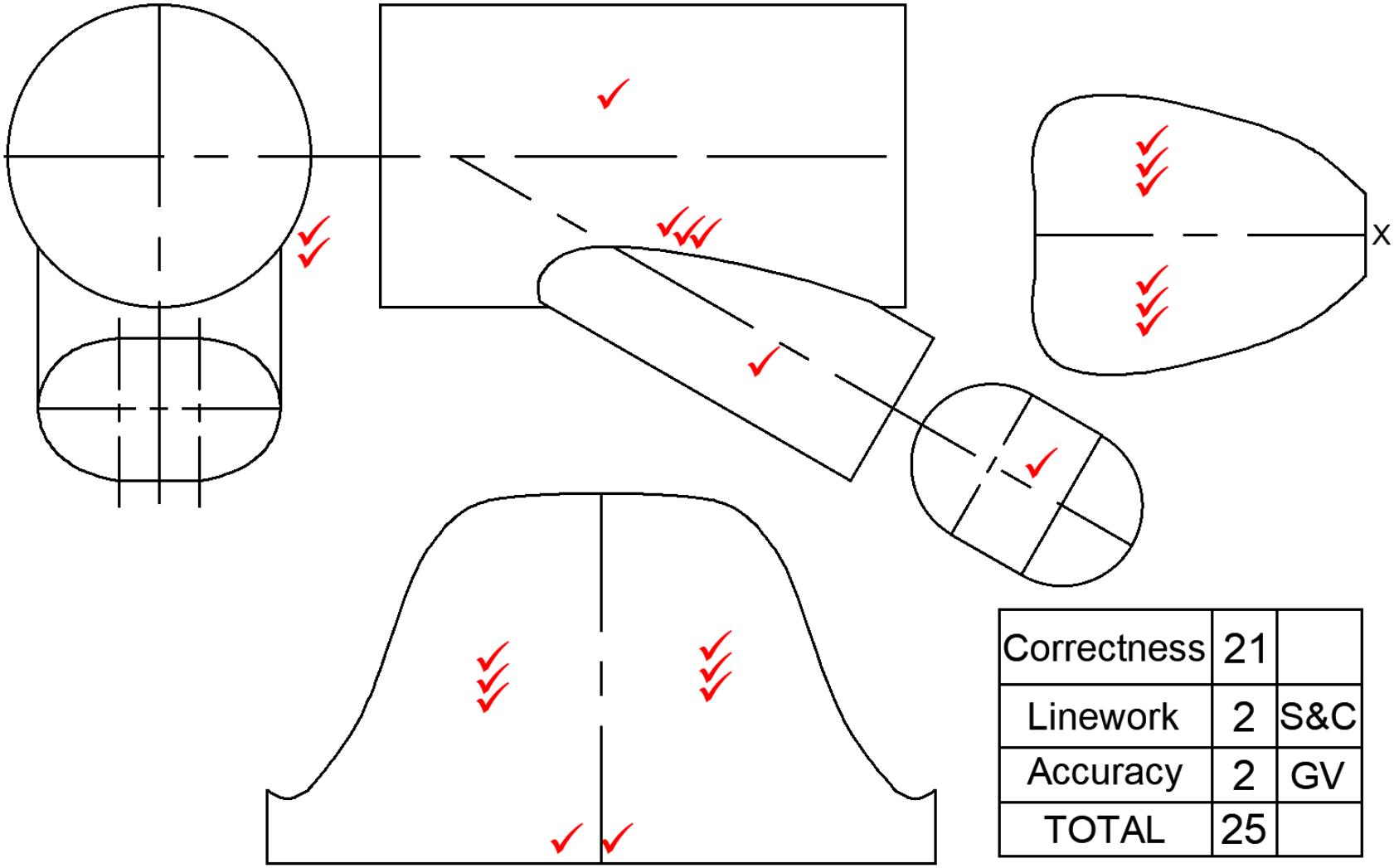

Correctness	21	
Linework	2	S&C
Accuracy	2	GV
TOTAL	25	

OBLIQUE T-PIECE SCALE 1:5

[25]

TOTAL:100

Copyright reserved