higher education & training

Department:
Higher Education and Training
REPUBLIC OF SOUTH AFRICA

T1350**(E)**(J29)T

NATIONAL CERTIFICATE

PLATING AND STRUCTURAL STEEL DRAWING N3

(8090113)

29 July 2019 (X-Paper)
09:00–13:00

Requirements: ONE A2 drawing sheet

Nonprogrammable calculators may be used.

Drawing instruments must be used.

This question paper consists of 5 pages, 3 diagram sheets and 1 answer sheet.

Copyright reserved

DEPARTMENT OF HIGHER EDUCATION AND TRAINING
REPUBLIC OF SOUTH AFRICA

NATIONAL CERTIFICATE
PLATING AND STRUCTURAL STEEL DRAWING N3
TIME: 4 HOURS
MARKS: 100

NOTE: If you answer more than the required number of questions only the required number will be marked. Clearly cross out ALL work you do NOT want to be marked.

INSTRUCTIONS AND INFORMATION

1. Answer any FOUR questions.
2. Read ALL the questions carefully.
3. Number the answers according to the numbering system used in this question paper.
4. Show ALL construction lines.
5. Do TWO questions on the front and TWO questions on the reverse side of the DRAWING SHEET.
6. Add a title and scale to each answer.
7. Work neatly.

Copyright reserved

QUESTION 1

FIGURE 1, DIAGRAM SHEET 1 (attached), shows the front view of a round-to-rectangle piece which is a typical example of a nozzle usually connected to a cylindrical supply pipe transforming to a narrow rectangular outlet.

1.1 Draw, to scale 1:1, the given views. (2)

1.2 Calculate the true lengths of the bend lines as indicated on the ANSWER SHEET (attached). (13)

1.3 Use the true lengths calculated in QUESTION 1.2 to develop the symmetrical half-pattern of the transition piece. The joint of the transition piece is at A–1 and D–7. (6)

NOTE: NO marks will be awarded for true lengths taken from the drawing to scale.

Mark allocation for drawing-office practice:

Line work and printing (2)
Accuracy and neatness (2)
[25]

QUESTION 2

The feed chute shown in FIGURE 2, DIAGRAM SHEET 1 (attached), has a rectangular outlet at the bottom and a rectangular inlet on the side. It is used in a furniture factory.

2.1 Draw, to scale 1:10, the given views of the feed chute. (3)

2.2 Develop the shape of the plate required to make the feed chute. (12)

2.3 Determine a template for the kink angle. (3)

Mark allocation for drawing-office practice:

Accuracy (2)
Printing title and scale (2)
Line work (3)
[25]

Copyright reserved

QUESTION 3

FIGURE 3, DIAGRAM SHEET 2 (attached), shows TWO views of an oblique T-piece used in an oil-refining plant.

3.1 Draw, to scale 1:5, the given views. (4)

3.2 Determine the line of penetration. (6)

3.3 Develop the branch pipe. (4)

3.4 Develop the shape of the hole in the main pipe. (5)

Mark allocation for drawing-office practice:

Accuracy (2)
Printing title and scale (2)
Line work (2)
[25]

QUESTION 4

FIGURE 4, DIAGRAM SHEET 2 (attached), shows a cylindrical pipe which fits on a dome and is one part of an exhaust duct system.

4.1 Draw, to scale 1:2, the given view. (2)

4.2 Draw, to scale 1:2, the top view. (2)

4.3 Determine the line of penetration. (7)

4.4 Develop the shape of the cylindrical pipe. (7)

Mark allocation for drawing-office practice:

Accuracy (2)
Title and scale (2)
Line work (3)
[25]

Copyright reserved

QUESTION 5

FIGURE 5, DIAGRAM SHEET 3 (attached), shows the front view of a welded stanchion that consists of the following material:

Item 1	350 × 150 RSJ × 400 mm long (tapered flange 20 mm to 10 mm) web 15 mm thick	1 off
Item 2	200 × 100 I-beam × 200 mm long (flange and web – 15 mm thick)	3 off
Item 3	125 × 125 mitred gusset plate – 12 mm thick	3 off

Draw, to scale 1:5, the following in first-angle orthographic projection:

5.1 The given front view. (3)

5.2 The left view (6)

5.3 The top view (6)

5.4 Print the title 'WELDED STANCHION' and the scale centred beneath the views. (1)

5.5 Insert the projection symbol. (2)

Mark allocation for drawing-office practice:

Accuracy and neatness (2)
Title and scale (2)
Line work (3)
[25]

TOTAL: 100

Copyright reserved

DIAGRAM SHEET 1

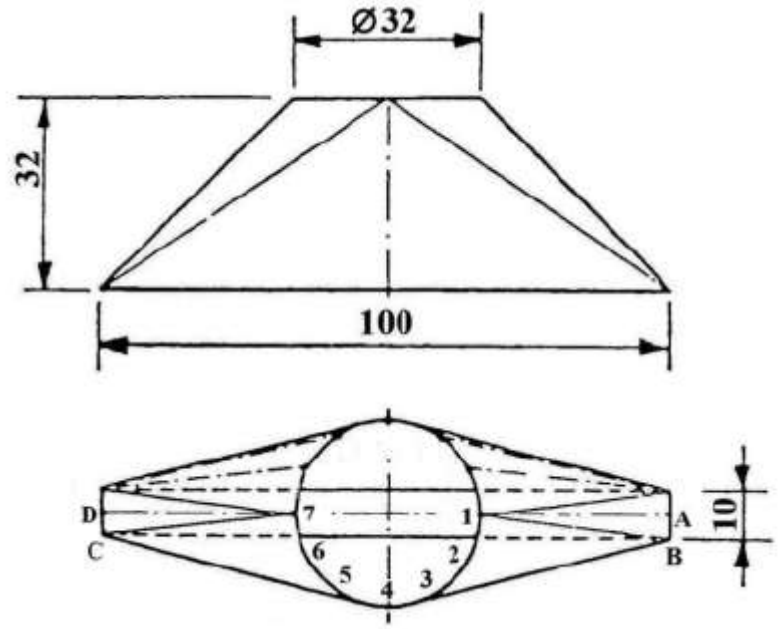

FIGURE 1

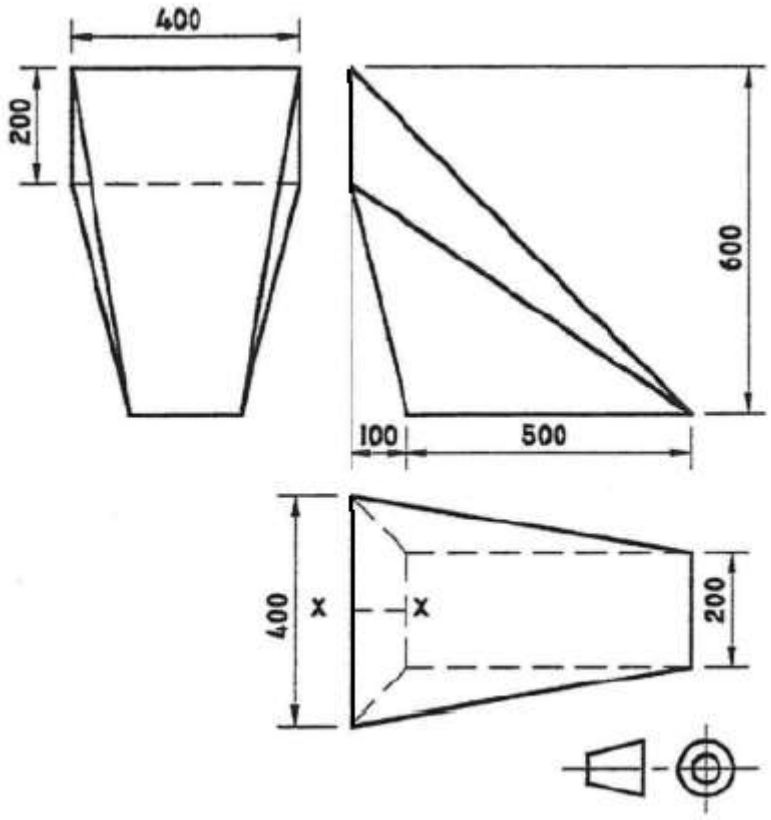

FIGURE 2

Copyright reserved

DIAGRAM SHEET 2

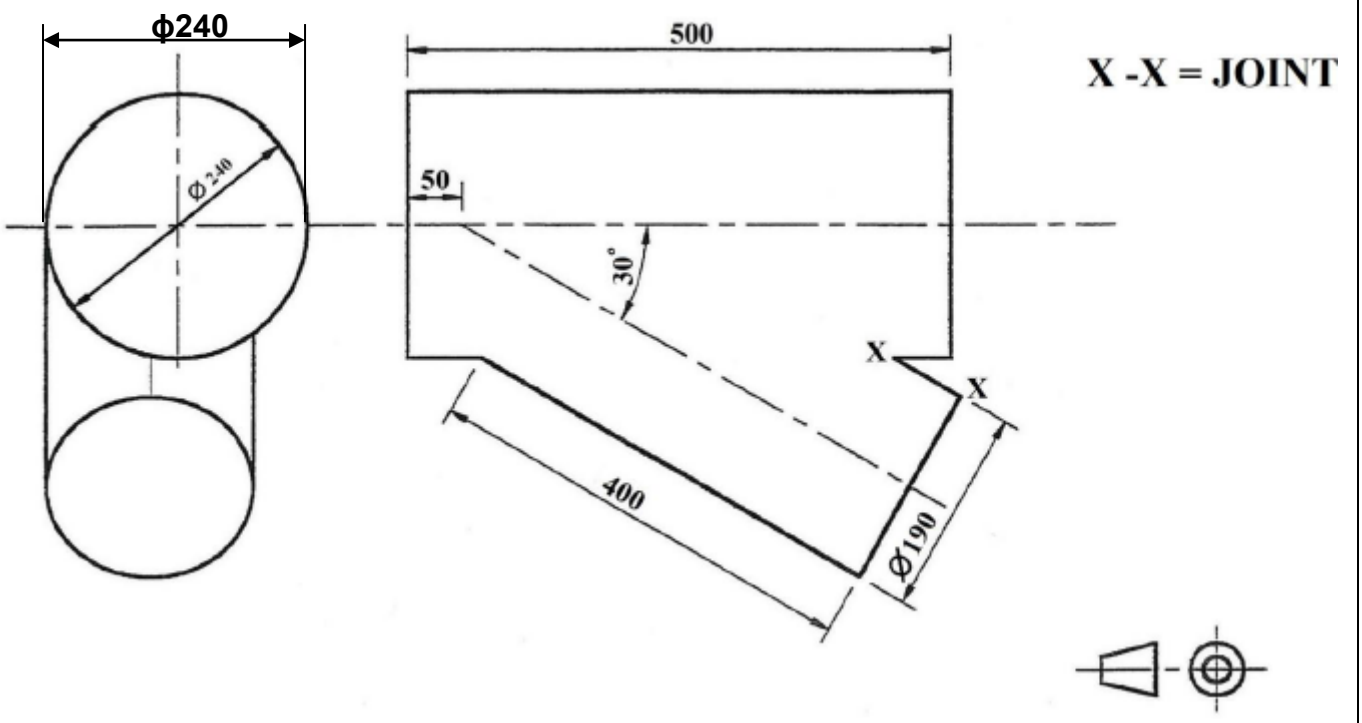

FIGURE 3

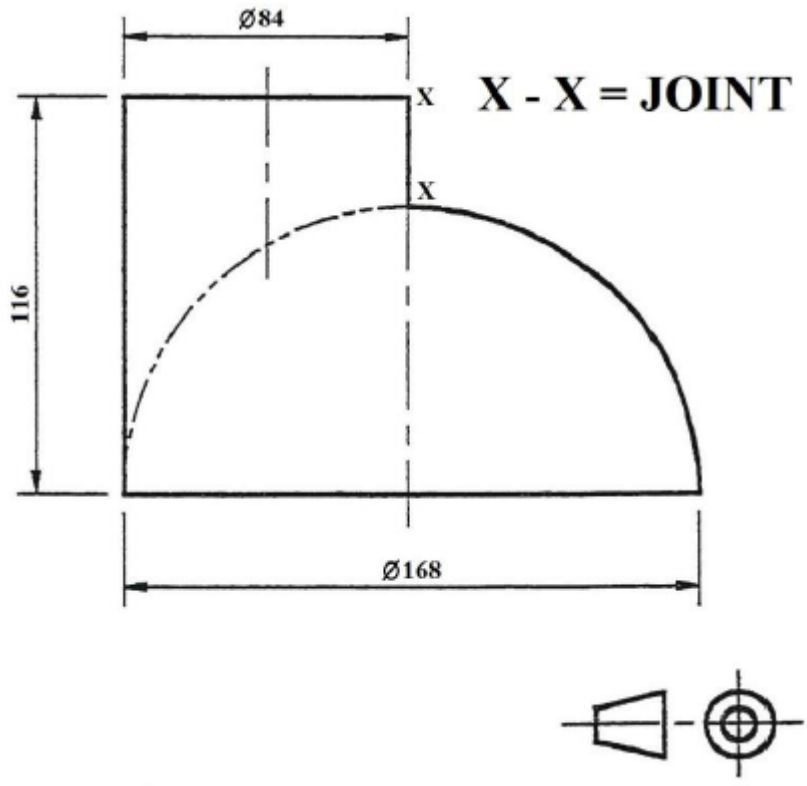

FIGURE 4

Copyright reserved

DIAGRAM SHEET 3

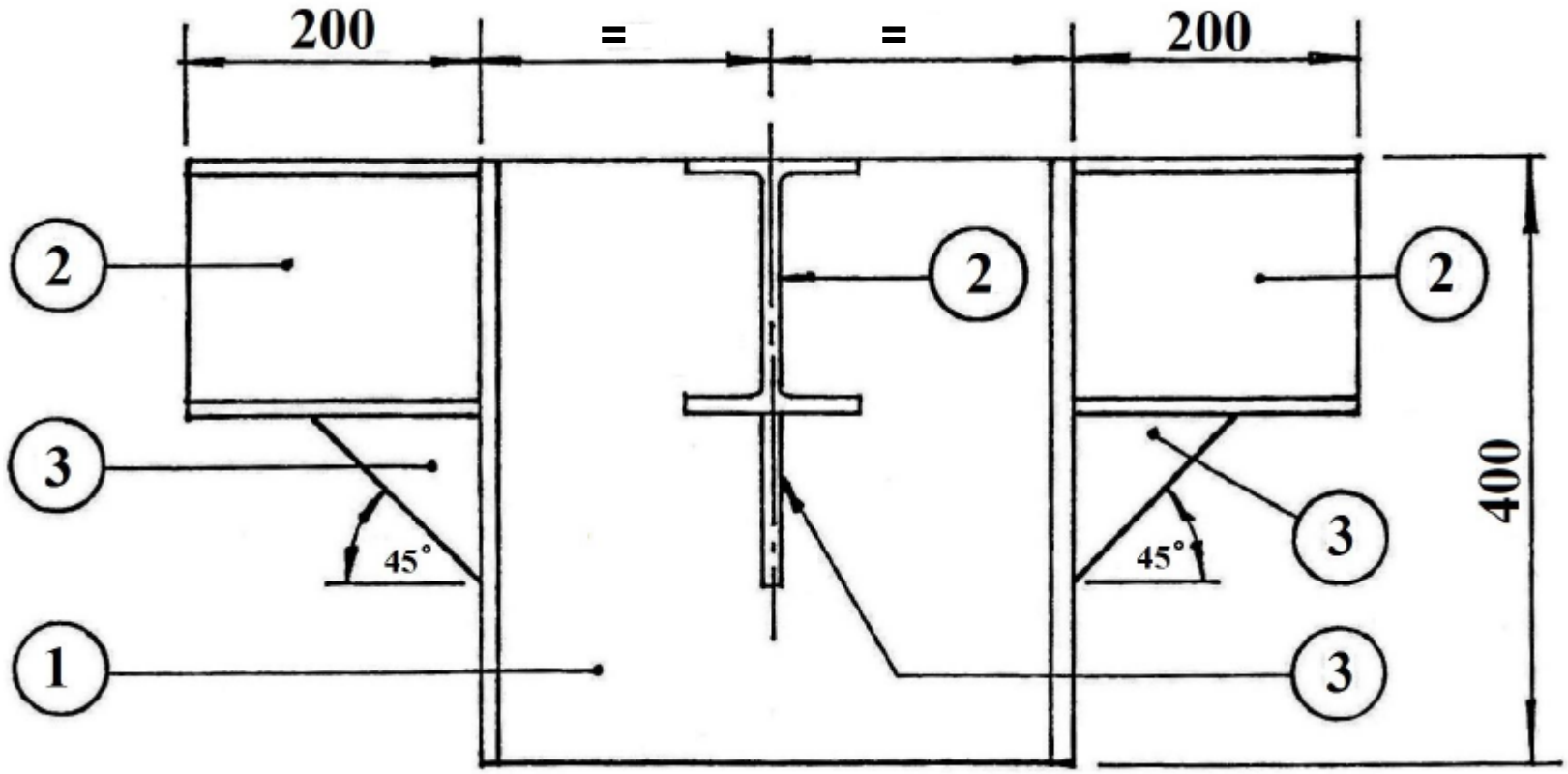

FIGURE 5

Copyright reserved

ANSWER SHEET EXAMINATION NUMBER: | | | | | | | | | | | | | |

QUESTION 1

This table must be submitted together with the DRAWING SHEET. The calculations must be done on the DRAWING SHEET and only the answers must be entered into the table below.

LINE	CALCULATED TRUE LENGTH VALUES	
1–2, 2–3, etc.		1
A1 = D7		2
B1 = C7		2
B2 = C6		3
B3 = C5		3
B4 = C4		2
	TOTAL:	**13**

Copyright reserved