higher education & training

Department:
Higher Education and Training
REPUBLIC OF SOUTH AFRICA

MARKING GUIDELINE

NATIONAL CERTIFICATE

PLATING AND STRUCTURAL STEEL DRAWING N3

29 JULY 2019

This marking guideline consists of 7 pages.

MARKING GUIDELINE CANNOT BE USED AS A MARKING TOOL BECAUSE IT IS NOT TO SCALE.

Copyright reserved

QUESTION 1

CALCULATIONS

$$1-2-3\ldots 7=\frac{\pi\times 32}{12}=8{,}378$$ ✓

$$A1=D7=\sqrt{(50-16)^2+(32)^2}$$ ✓

$$=46{,}69$$ ✓

$$B1=C7=\sqrt{(50-16)^2+(5)^2+32^2}$$ ✓

$$=46{,}957$$ ✓

$$B2=C6=\sqrt{\left(50-R\cos 30^0\right)^2+\left(R\sin 30^0-5\right)^2+32^2}$$ ✓ ✓

$$=48{,}367$$ ✓

$$B3=C5=\sqrt{\left(50-R\sin 30^0\right)^2+\left(R\cos 30^0-5\right)^2+32^2}$$ ✓ ✓

$$=53{,}539$$ ✓

$$B4=C4=\sqrt{50^2+(16-5)^2+32^2}$$ ✓

$$=60{,}374$$ ✓

1-2, 2-3, etc. $=\frac{\Pi\times 32}{12}=8{,}378$ (1)

A1 = D7 $=\sqrt{(50-16)^2+32^2}=46{,}69$ (2)

B1 = C7 $=\sqrt{(50^2-16)^2+5^2+32^2}=46{,}957$ (2)

B2 = C6 $=\sqrt{(50-13{,}856)^2+(8-5)^2+32^2}=48{,}367$ (3)

B3 = C5 $=\sqrt{(50-8)^2+(13{,}856-5)^2+32^2}=53{,}539$ (3)

B4 = C4 $=\sqrt{50^2+(16-5)^2+32^2}=60{,}374$ (2)

Copyright reserved

QUESTION 1

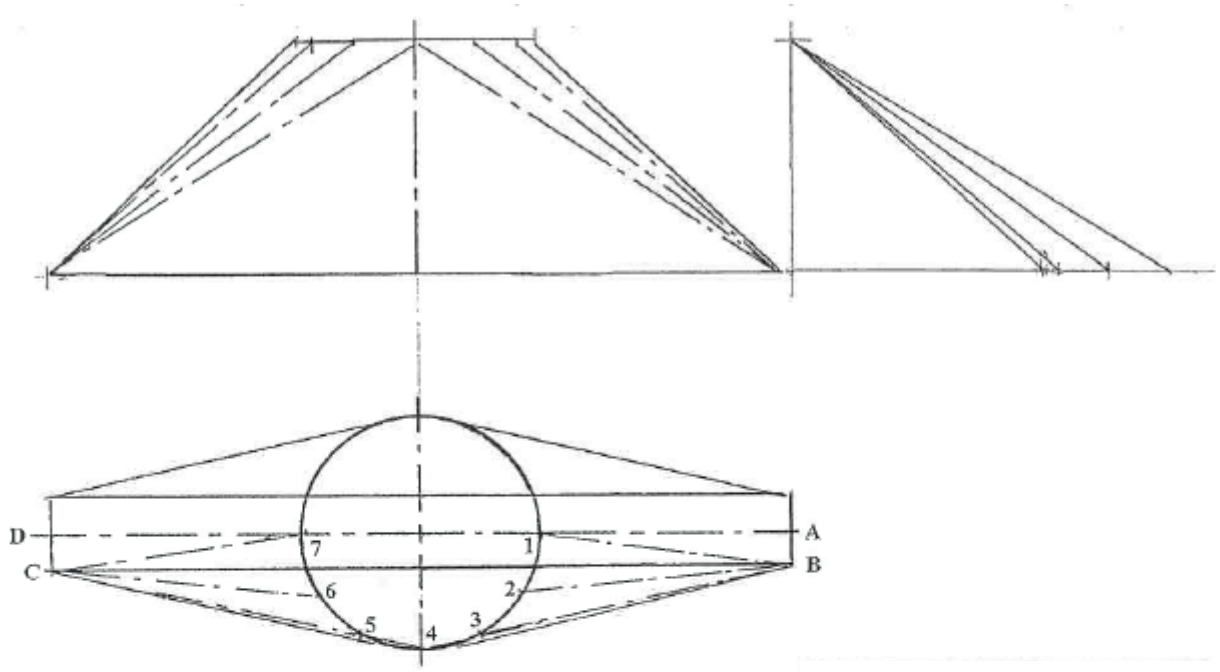

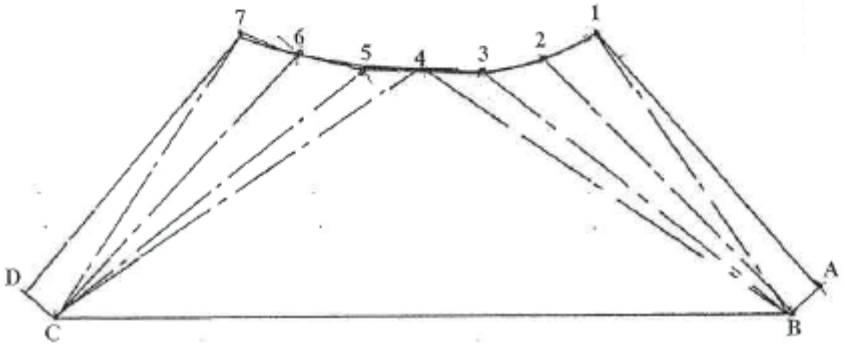

Given views	2
Calculations	13
Development	6
Line work and printing	2
Accuracy and neatness	2

[25]

QUESTION 2

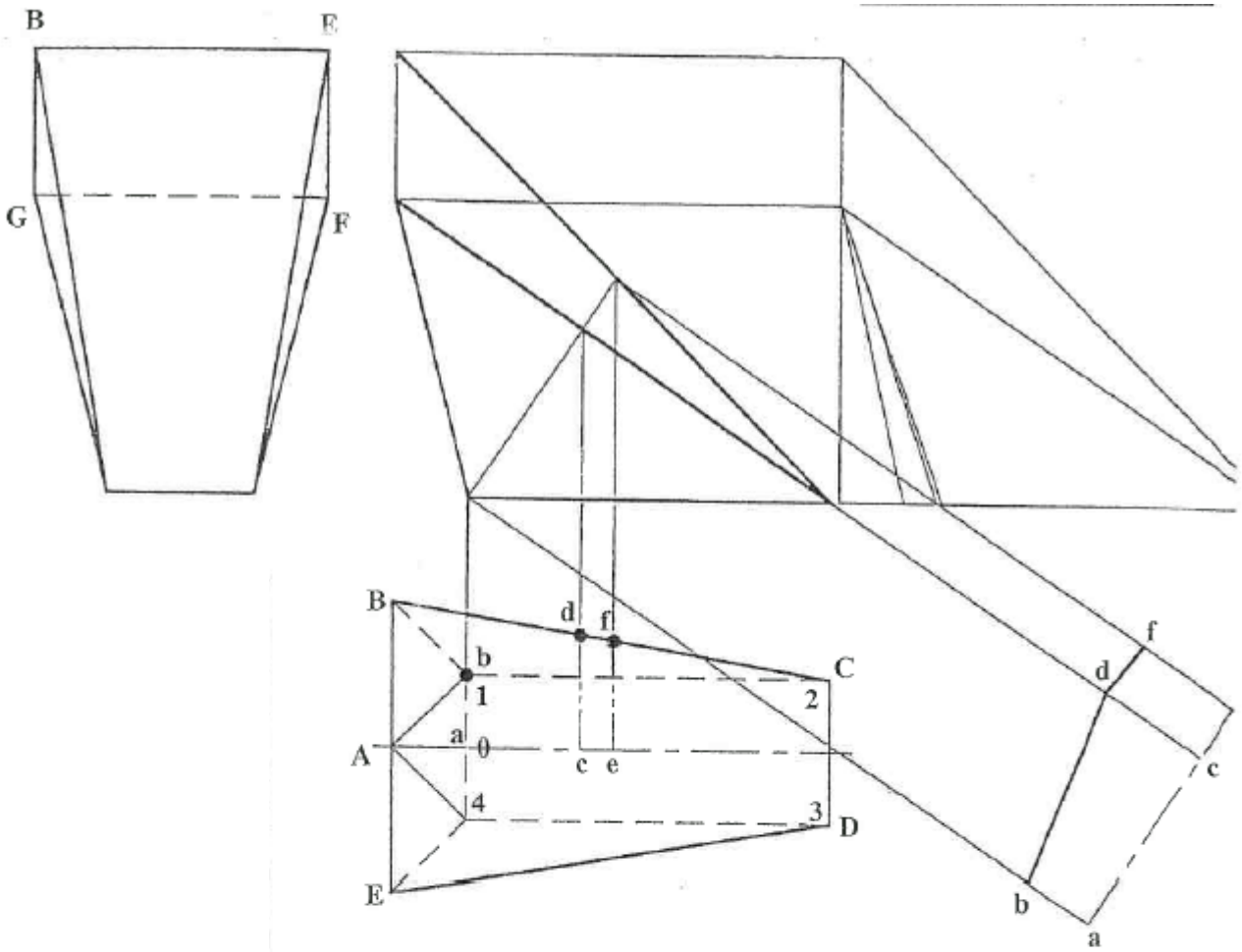

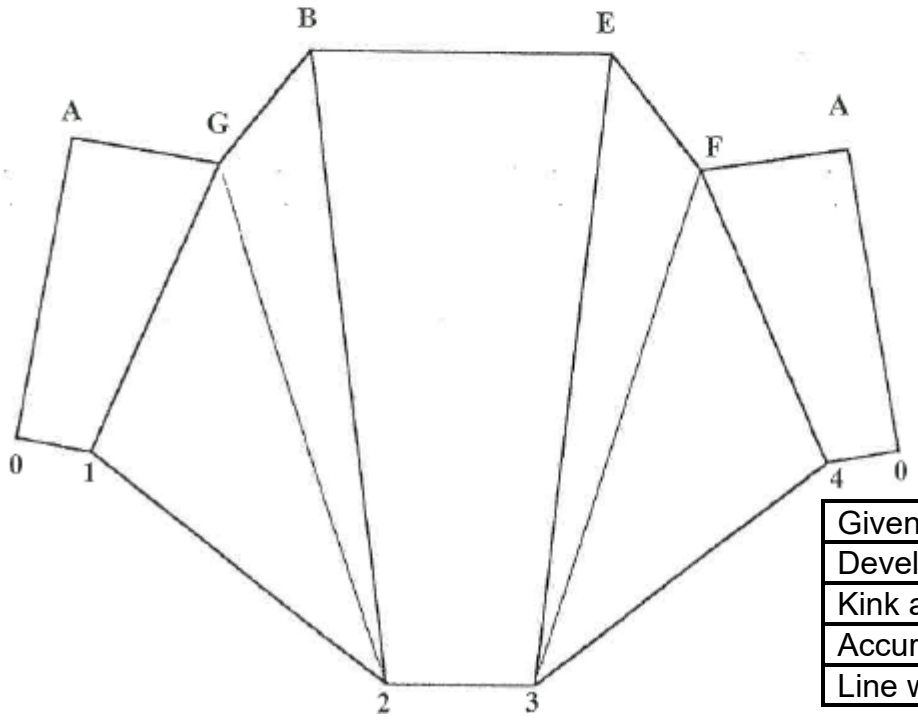

Given views	3
Development	12
Kink angle	3
Accuracy and neatness	4
Line work	3

[25]

QUESTION 3

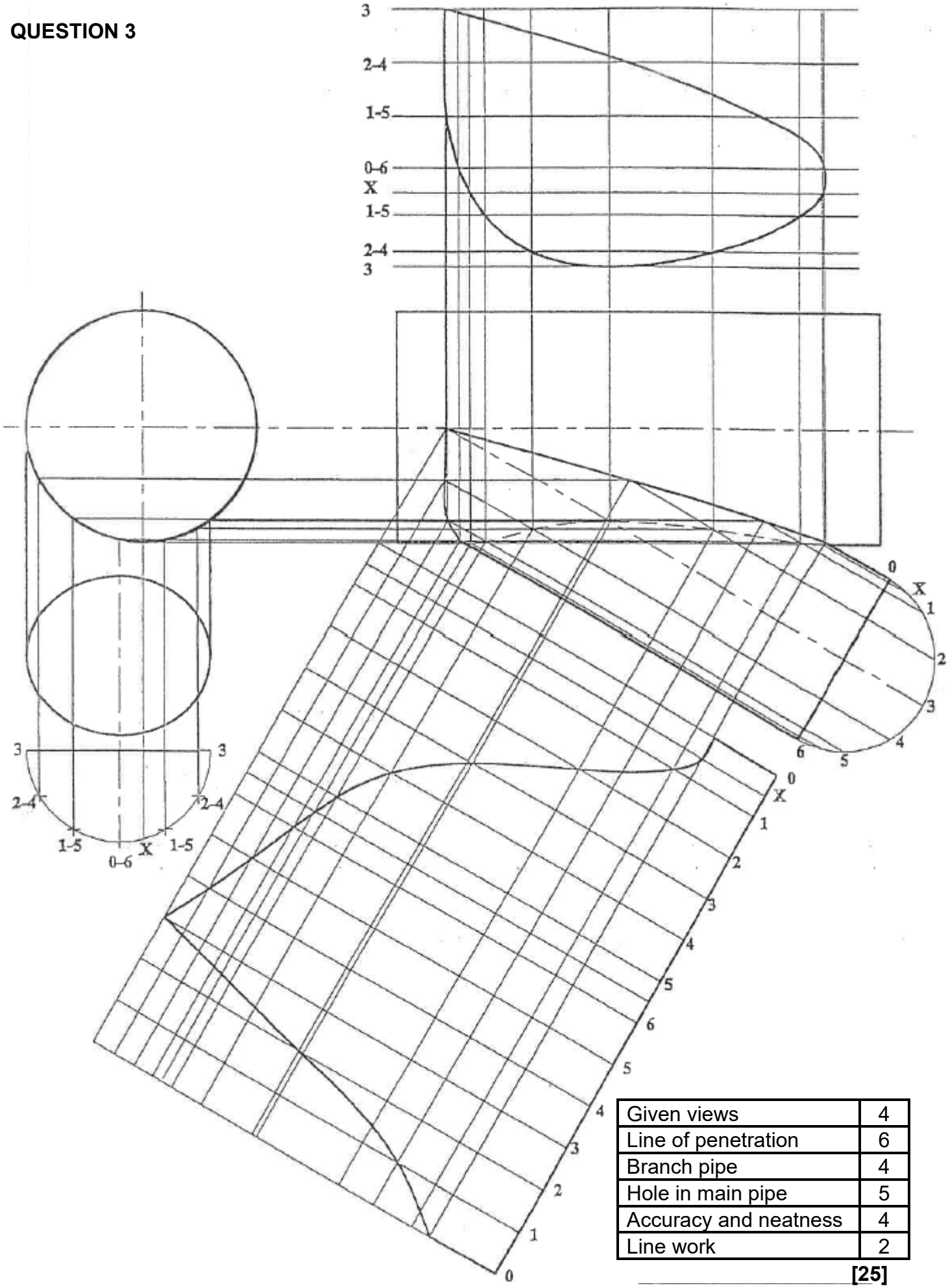

Given views	4
Line of penetration	6
Branch pipe	4
Hole in main pipe	5
Accuracy and neatness	4
Line work	2

[25]

QUESTION 4

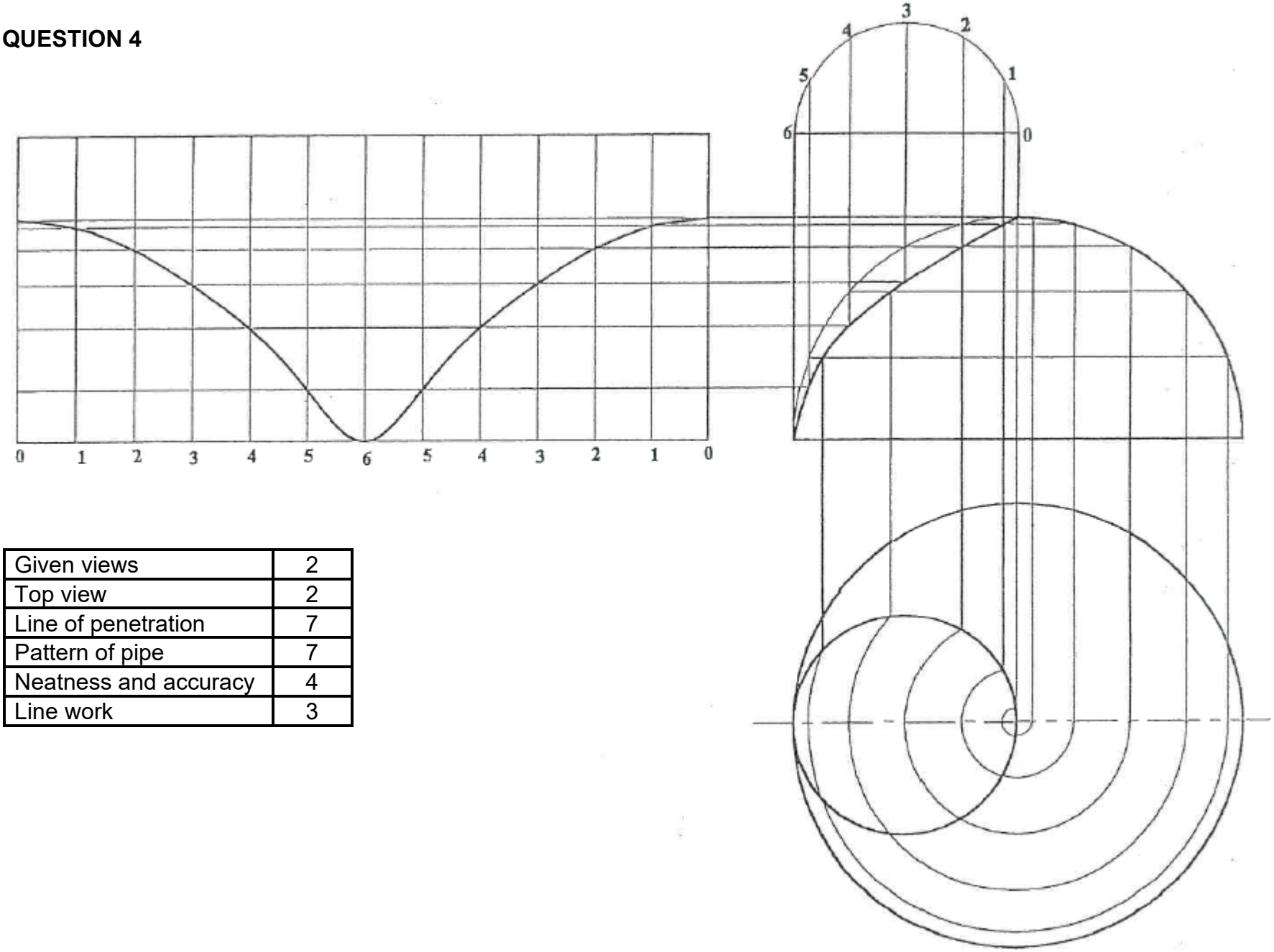

Given views	2
Top view	2
Line of penetration	7
Pattern of pipe	7
Neatness and accuracy	4
Line work	3

[25]

QUESTION 5

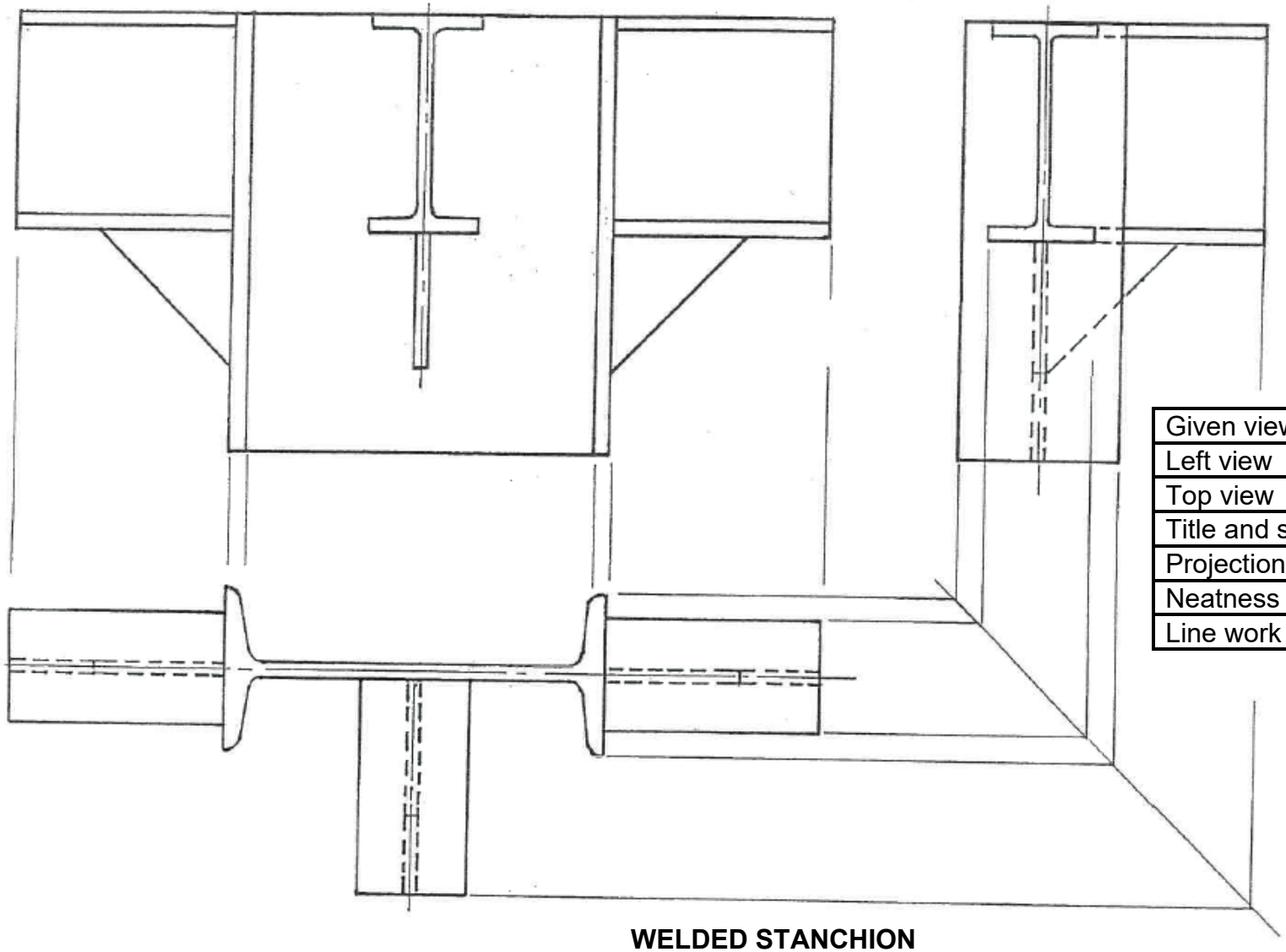

WELDED STANCHION
SCALE 1:5

Given view	3
Left view	6
Top view	6
Title and scale	2
Projection symbol	2
Neatness and accuracy	4
Line work	2



[25]

TOTAL: 100

Copyright reserved