higher education & training

Department:
Higher Education and Training
REPUBLIC OF SOUTH AFRICA

T1350**(E)**(J25)T

NATIONAL CERTIFICATE

PLATING AND STRUCTURAL STEEL DRAWING N3

(8090113)

25 July 2018 (X-Paper)
09:00–13:00

REQUIREMENTS: ONE A2 drawing sheet

Non Programmable calculators may be used.

Drawing instruments must be used.

This question paper consists of 5 pages and 3 diagram sheets.

Copyright reserved

DEPARTMENT OF HIGHER EDUCATION AND TRAINING
REPUBLIC OF SOUTH AFRICA

NATIONAL CERTIFICATE
PLATING AND STRUCTURAL STEEL DRAWING N3
TIME: 4 HOURS
MARKS: 100

NOTE: If you answer more than the required number of questions only the required number of questions will be marked. ALL work you do not want to be marked must be clearly crossed out.

INSTRUCTIONS AND INFORMATION

1. Answer any FOUR questions.
2. Read ALL the questions carefully.
3. Number the answers according to the numbering system used in this question paper.
4. Show ALL calculations on the DRAWING SHEET.
5. Insert the dimensions, a title and the scale of each drawing.
6. Answer TWO questions on the front and TWO questions on the reverse side of the DRAWING SHEET.
7. Only ONE DRAWING SHEET may be used.
8. Write neatly and legibly.

Copyright reserved

QUESTION 1

FIGURE 1, DIAGRAM SHEET 1 (attached), shows the front view of a column bracket which consists of the following parts:

ITEM 1: 250 mm × 200 mm x 15mm RSJ -1 off

ITEM 2: 250 mm × 90 mm x 15mm RSC -2 off

ITEM 3: 15 mm thick gusset plates -2 off

Draw, to scale 1 : 5, the following in first-angle orthographic projection:

1.1 The given front view (4)

1.2 The left view (6)

1.3 The top view (6)

Mark allocation for drawing office practice:

LINE WORK	DIMENSIONS	Title and Scale	PROJECTION SYMBOL	NEATNESS AND ACCURACY
3	2	1	1	2

[25]

QUESTION 2

FIGURE 2, DIAGRAM SHEET 1 (attached), shows the front and top view of a cone frustrum. The cone frustrum will be used to connect a stainless steel pipe to the machine in a bottling plant.

2.1 Draw the given views. (2)

2.2 Calculate the true lengths on the DRAWING SHEET. Show ALL calculations. (10)

NOTE: NO marks will be awarded for lengths taken from a drawing to scale.

2.3 Use the information from QUESTION 2.2 to develop the cone frustrum. (6)

Mark allocation for drawing office practice:

LINE WORK	ACCURACY	LAYOUT AND NEATNESS	TITLE AND SCALE
2	2	2	1

(7)

Scale 1 : 1

[25]

Copyright reserved

QUESTION 3

FIGURE 3, DIAGRAM SHEET 2 (attached), shows an incomplete junction between a truncated cone and a conical cover. The conical cover is then fitted on a beer tank in a brewery. The drawing must be printed as edited.

3.1 Draw, to scale 1 : 5, the following views:

3.1.1 The given view (2)

3.1.2 A top view of the junction between the truncated cone and the conical cover (3)

3.2 Construct the line of penetration between the truncated cone and the conical cover. (7)

3.3 Develop the pattern of the truncated cone. The joint of the pattern is shown at X–X. (6)

HINT: Use the same method of cutting planes as used in a connection between a cone and a dome.

Mark allocation for drawing office practice:

LINE WORK	ACCURACY	LAYOUT AND NEATNESS	TITLE AND SCALE
2	2	2	1

(7)

[25]

QUESTION 4

FIGURE 4, DIAGRAM SHEET 2 (attached), shows two views of a straight-backed junction piece that is used in a meat processing plant.

4.1 Draw the front view of the junction piece. (2)

4.2 Draw the top view of the junction piece. (3)

4.3 Develop half a pattern as indicated on the given top view. (10)

4.4 Show all true lengths for the construction of the development. (3)

Mark allocation for drawing office practice:

LINE WORK	ACCURACY	LAYOUT AND NEATNESS	TITLE AND SCALE
3	2	1	1

(7)

Scale 1 : 2 **[25]**

QUESTION 5

FIGURE 5, DIAGRAM SHEET 3 (attached), shows three views of an oblique T-piece with an oval-shaped branch pipe.

5.1 Draw the given views of the oblique T-piece. (3)

5.2 Determine the interpenetration line by construction. (5)

5.3 Develop the shape of the oval branch pipe. (5)

5.4 Develop the contour of the hole in the main pipe. (5)

Mark allocation for drawing office practice:

LINE WORK	ACCURACY	LAYOUT AND NEATNESS	TITLE AND SCALE
2	2	2	1

(7)

Scale 1 : 5 **[25]**

TOTAL: 100

Copyright reserved

DIAGRAM SHEET 1

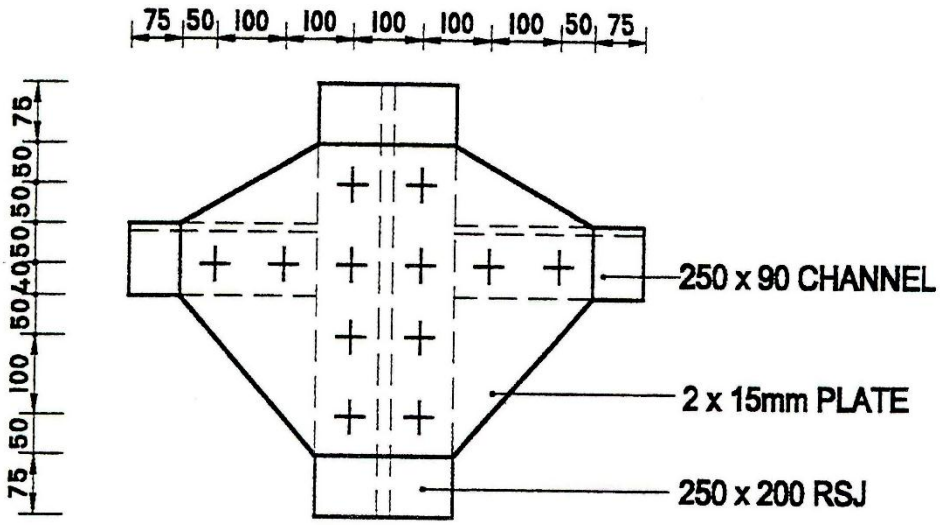

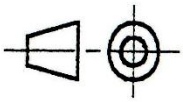

FIGURE 1

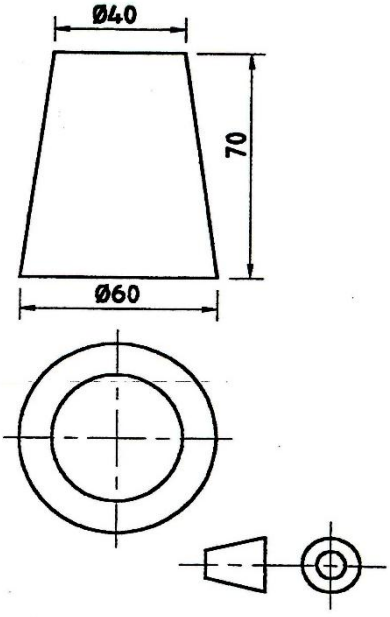

FIGURE 2

DIAGRAM SHEET 2

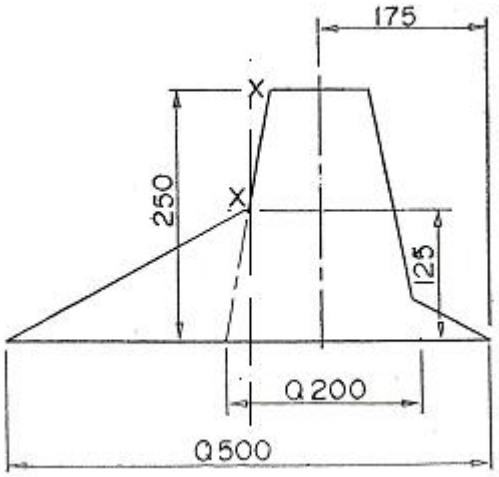

FIGURE 3

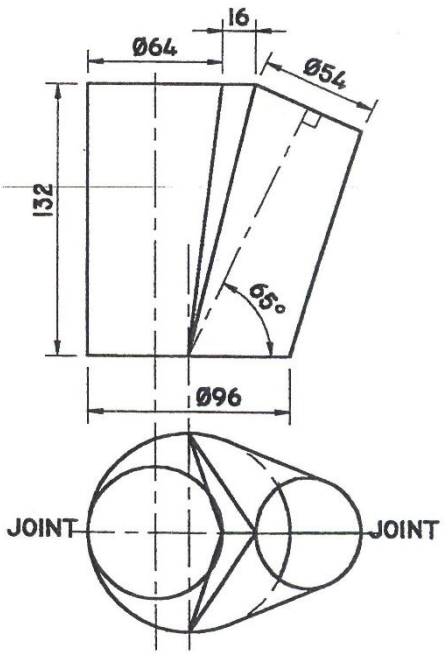

FIGURE 4

Copyright reserved

DIAGRAM SHEET 3

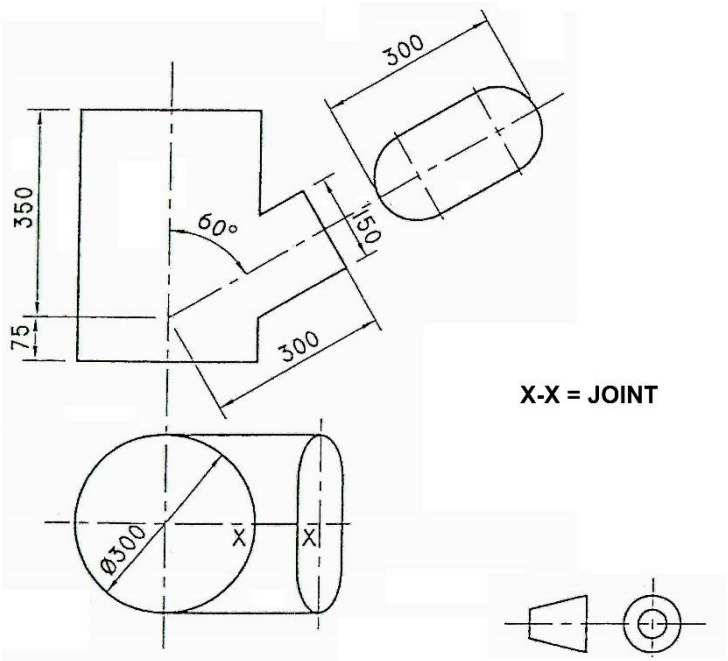

FIGURE 5

Copyright reserved