higher education & training

Department:
Higher Education and Training
REPUBLIC OF SOUTH AFRICA

MARKING GUIDELINE

NATIONAL CERTIFICATE

PLATING AND STRUCTURAL STEEL DRAWING N3

25 JULY 2018

This marking guideline consists of 7 pages.
NOTE: THE MEMORANDUM IS NOT DRAWN TO SCALE AND CANNOT BE USED AS A MARKING TOOL.

Copyright reserved

QUESTION 1

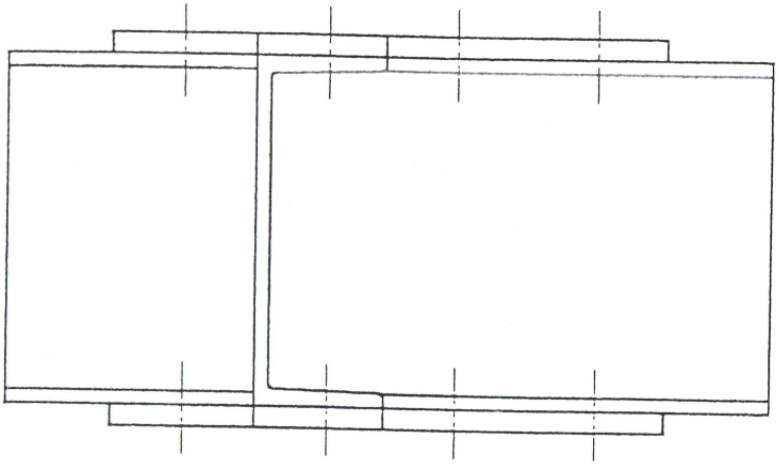

FRONT VIEW	4
LEFT VIEW	6
TOP VIEW	6
LINEWORK	3
ACCURACY AND NEATNESS	2
DIMENSIONS	2
PROJECTION SYMBOL	1
TITLE AND SCALE	1
TOTAL	**25**

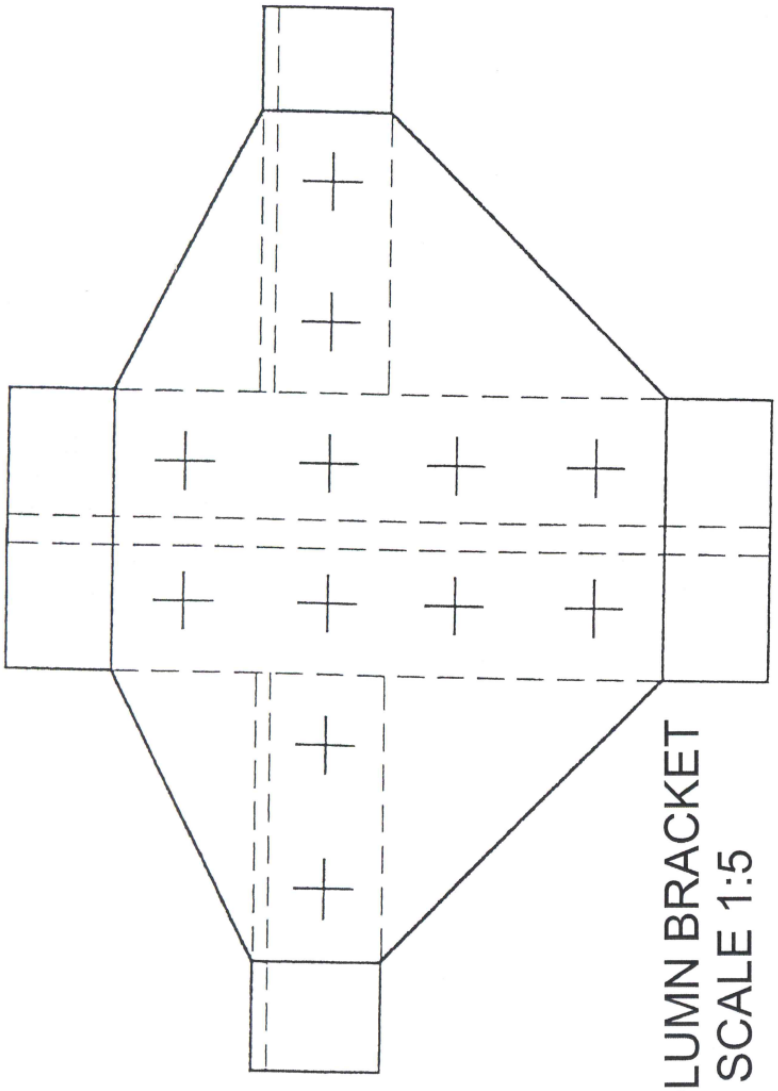

COLUMN BRACKET
SCALE 1:5

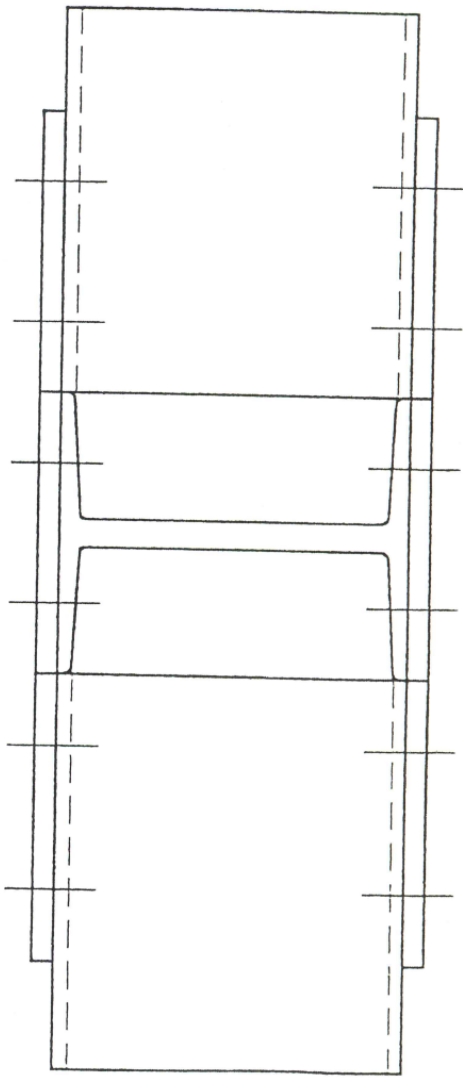

[25]

QUESTION 2

$x=R\sin 30^0=30\times 0,5=15mm$ $y=R\cos 30^0=30\times 0,866=5,98mm$

$b\text{-}0=\sqrt{15^2+5,98^2}=16,148mm$ $\therefore$ True Length of

$b\text{-}0=\sqrt{16,148^2+70^2}=72.11mm$ Or $b\text{-}0=\sqrt{(0,866R\text{-}r)^2+(0,5R)^2+h^2}$

$b\text{-}0=\sqrt{(0,866\times 30\text{-}20)^2+(0,5\times 30)^2+70^2}$ $b\text{-}0=72.11mm$

$a\text{-}0=\sqrt{10^2+70^2}=70,711mm$ Or $a\text{-}0=\sqrt{(R\text{-}r)^2+h^2}$

$a\text{-}0=\sqrt{(30\text{-}20)^2+70^2}=70,711mm$ Arc $a\text{-}b=\frac{\pi\times D}{12}=\frac{\pi\times 60}{12}=15,708mm$

Arc $0\text{-}1=\frac{\pi\times d}{12}=\frac{\pi\times 40}{12}=10,472mm$ (10)

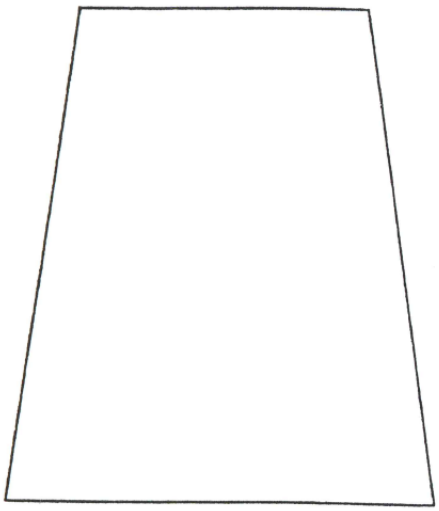

GIVEN VIEWS	2
CALCULATIONS	10
DEVELOPMENT	6
LINEWORK	2
ACCURACY	2
LAYOUT AND NEATNESS	2
TITLE AND SCALE	1
TOTAL	**25**

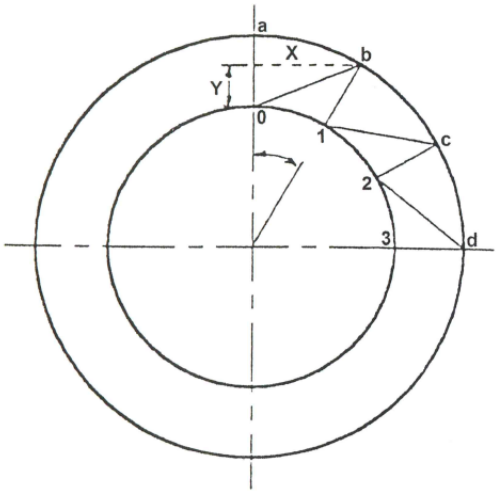

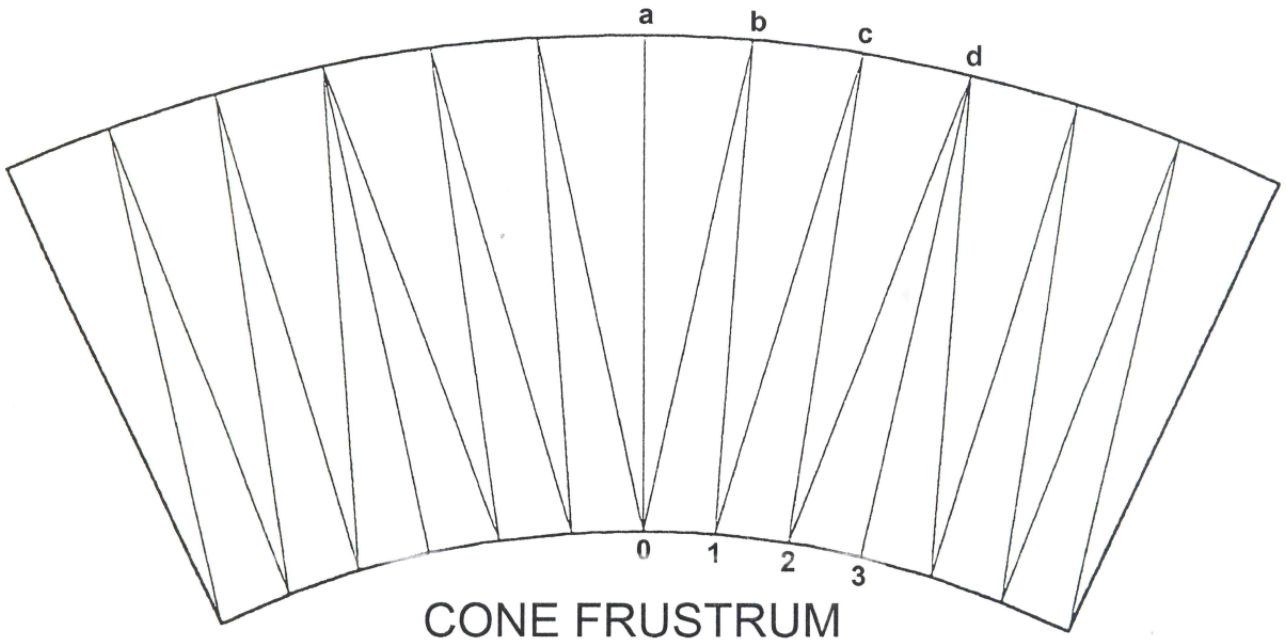

CONE FRUSTRUM
SCALE 1:1

[25]

QUESTION 3

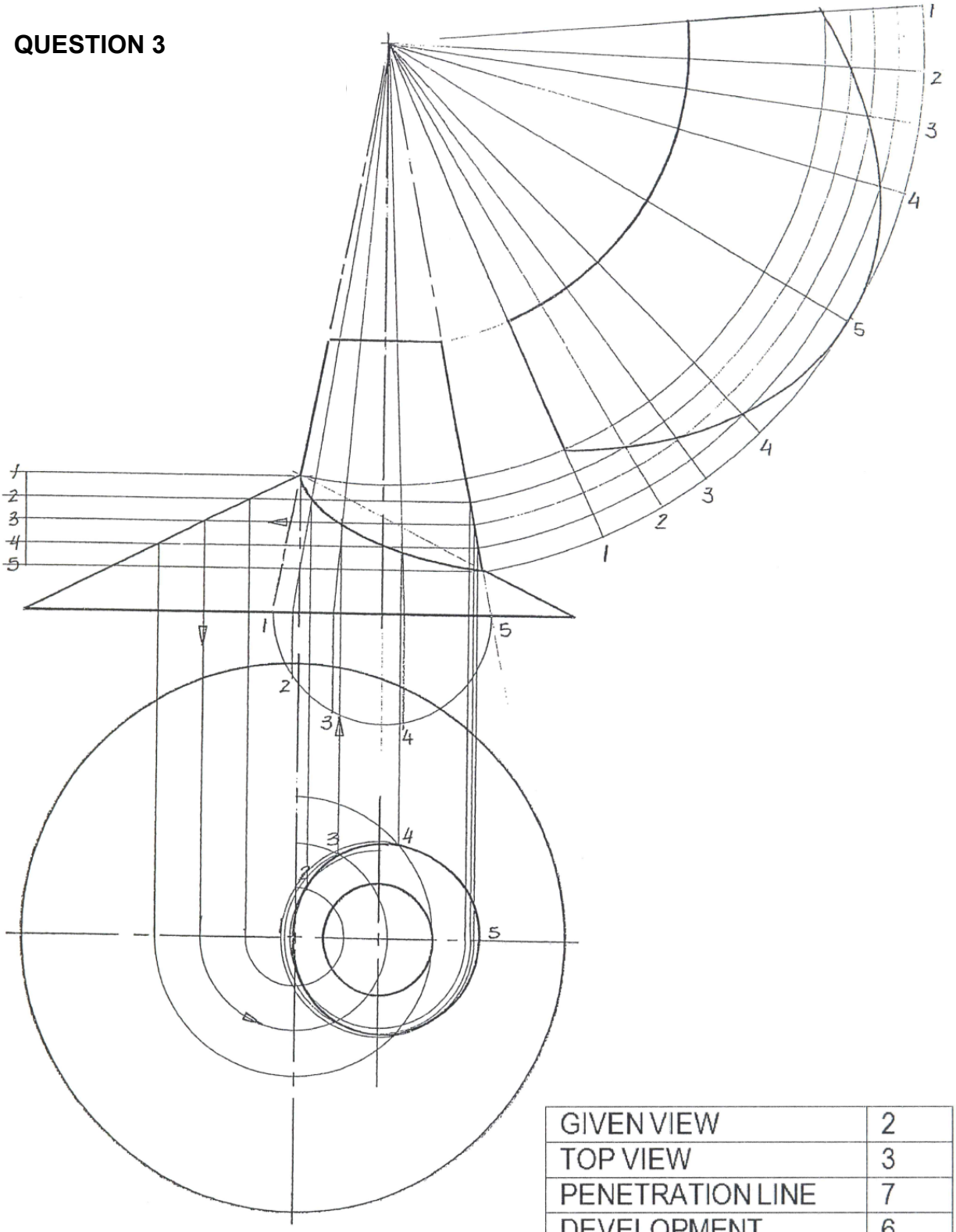

CONICAL COVER
SCALE 1:5

GIVEN VIEW	2
TOP VIEW	3
PENETRATION LINE	7
DEVELOPMENT	6
LINEWORK	2
ACCURACY	2
LAYOUT AND NEATNESS	2
TITLE AND SCALE	1
TOTAL	**25**

[25]

QUESTION 4

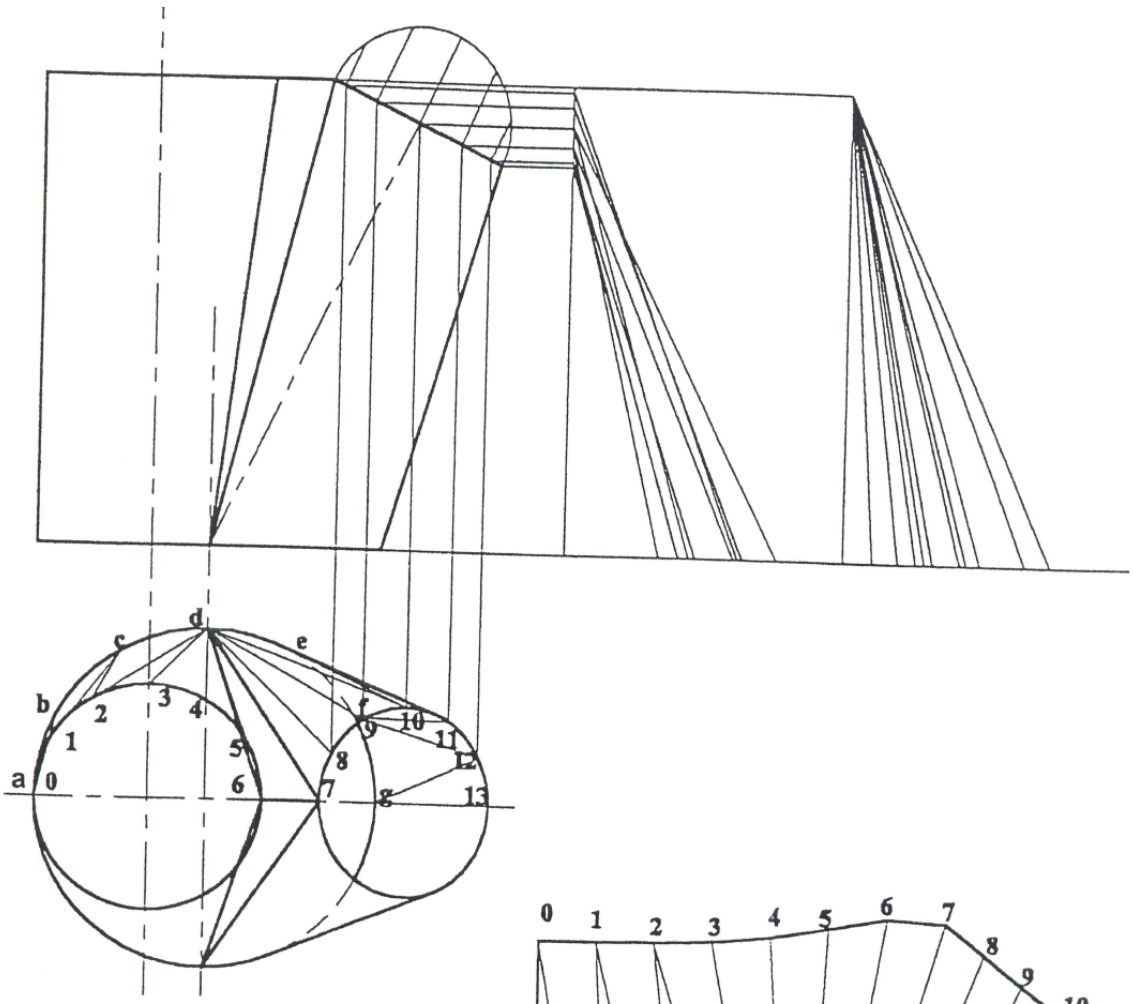

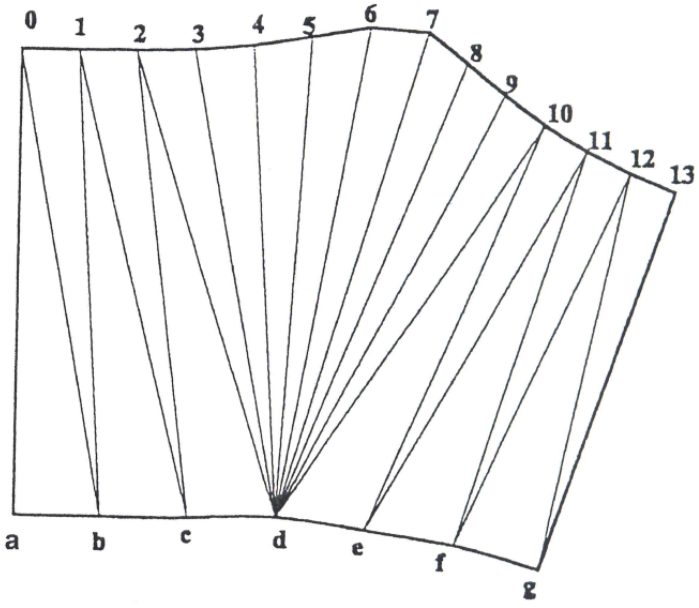

STRAIGHT-BACK JUNCTION
SCALE 1:2

FRONT VIEW	2
TOP VIEW	3
DEVELOPMENT	13
LINEWORK	2
ACCURACY	2
LAYOUT AND NEATNESS	2
TITLE AND SCALE	1
TOTAL	**25**

[25]

QUESTION 5

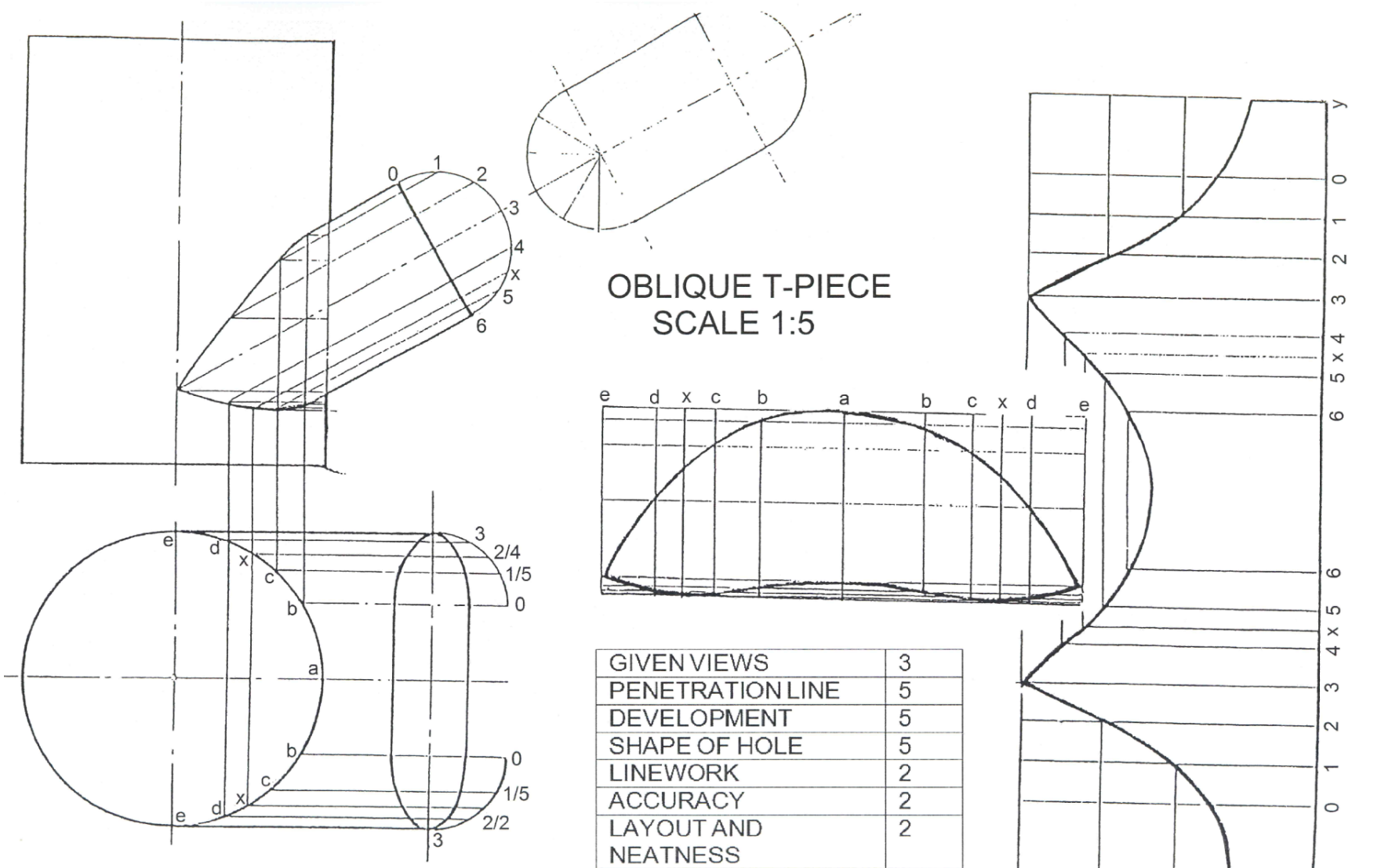

GIVEN VIEWS	3
PENETRATION LINE	5
DEVELOPMENT	5
SHAPE OF HOLE	5
LINEWORK	2
ACCURACY	2
LAYOUT AND NEATNESS	2
TITLE AND SCALE	1
TOTAL	**25**

[25]

TOTAL: 100

Copyright reserved