higher education & training

Department:
Higher Education and Training
REPUBLIC OF SOUTH AFRICA

NATIONAL CERTIFICATE

PLATING AND STRUCTURAL STEEL DRAWING N3

(8090113)

6 April 2021 (X-paper)
09:00–13:00

This question paper consists of 7 pages.

044Q1A2106

Copyright reserved

DEPARTMENT OF HIGHER EDUCATION AND TRAINING
REPUBLIC OF SOUTH AFRICA

NATIONAL CERTIFICATE
PLATING AND STRUCTURAL STEEL DRAWING N3
TIME: 4 HOURS
MARKS: 100

NOTE: If you answer more than the required number of questions, only the required number of questions will be marked. All work that you do not want to be marked, must be clearly crossed out.

INSTRUCTIONS AND INFORMATION

1. Answer any FOUR questions.
2. Read all the questions carefully.
3. Number the answers according to the numbering system used in this question paper.
4. Show all construction lines.
5. Do TWO questions on the front and TWO questions on the reverse side of the DRAWING SHEET.
6. Add a title and scale to each answer.
7. Marks will be allocated for neatness.
8. Write neatly and legibly.

Copyright reserved

QUESTION 1

FIGURE 1, below, shows two views of a square to rectangular transition piece used in a mine.

1.1 Draw to the given views. (2)

1.2 Calculate the true lengths to develop half the pattern of the transition piece. (12)

1.3 Use the true lengths to develop the pattern of the transition piece. (6)

Mark allocation for drawing office practice for the above question is as follows:

Mark allocation for line work (2)

Mark allocation for accuracy (1)

Mark allocation for neatness (1)

Mark allocation for title and scale (1)

SCALE 1:1 **[25]**

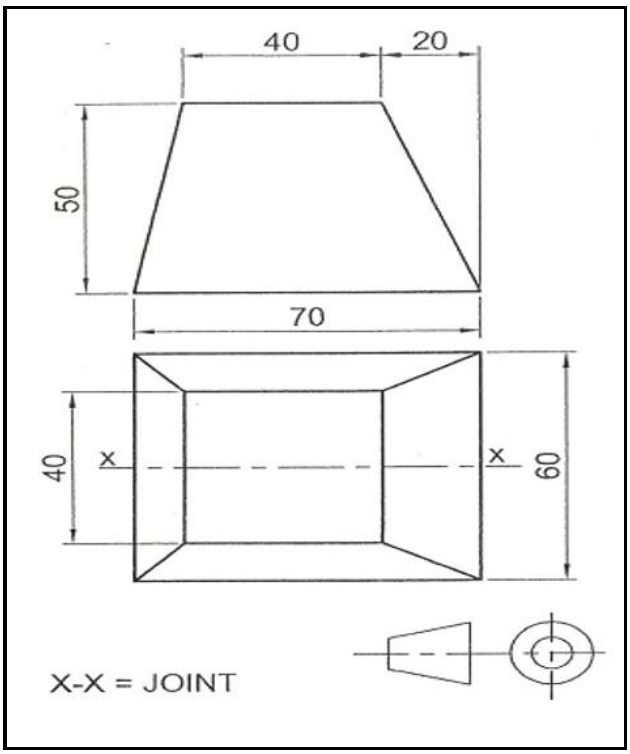

FIGURE 1

QUESTION 2

FIGURE 2, below, shows two views of an oblique rectangular to round chute which is used in the ducting system in a mall.

2.1 Draw to scale 1:10 the given views showing all the bending lines (5)

2.2 Develop the pattern for the plate required to make the chute (12)

Mark allocation for drawing office practice for the above question is as follows:

Mark allocation for line work (3)

Mark allocation for accuracy (2)

Mark allocation for layout (2)

Mark allocation for title and scale (1)

SCALE 1:10 **[25]**

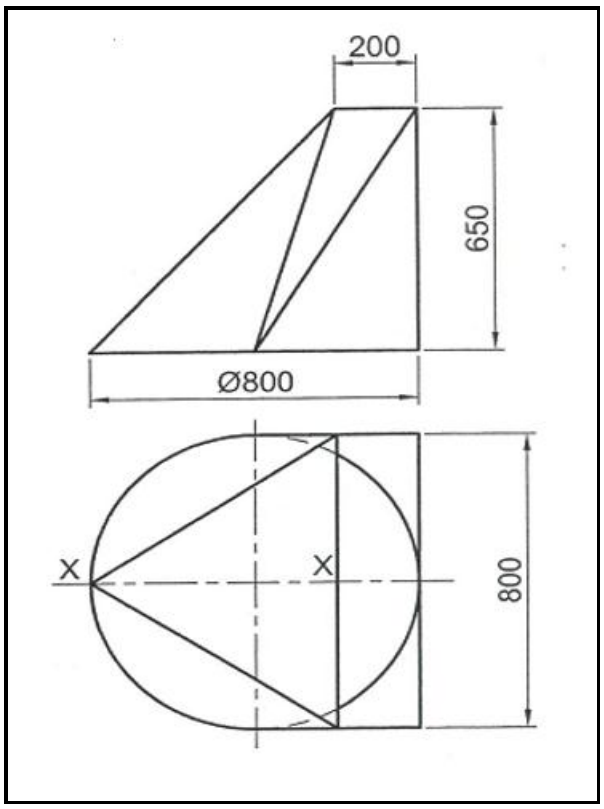

FIGURE 2

QUESTION 3

FIGURE 3, below, shows a cone and dome intersection used as a lid in a dairy farm.

3.1 Draw the given view. (3)

3.2 Draw the inter penetrating line by construction between the cone and the dome. (6)

3.3 Develop the pattern of the plate required to make the cone (6)

Mark allocation for drawing office practice for the above question is as follows:

Mark allocation for line work (4)

Mark allocation for accuracy (3)

Mark allocation for neatness (2)

Mark allocation for title and scale (1)

SCALE 1:10 **[25]**

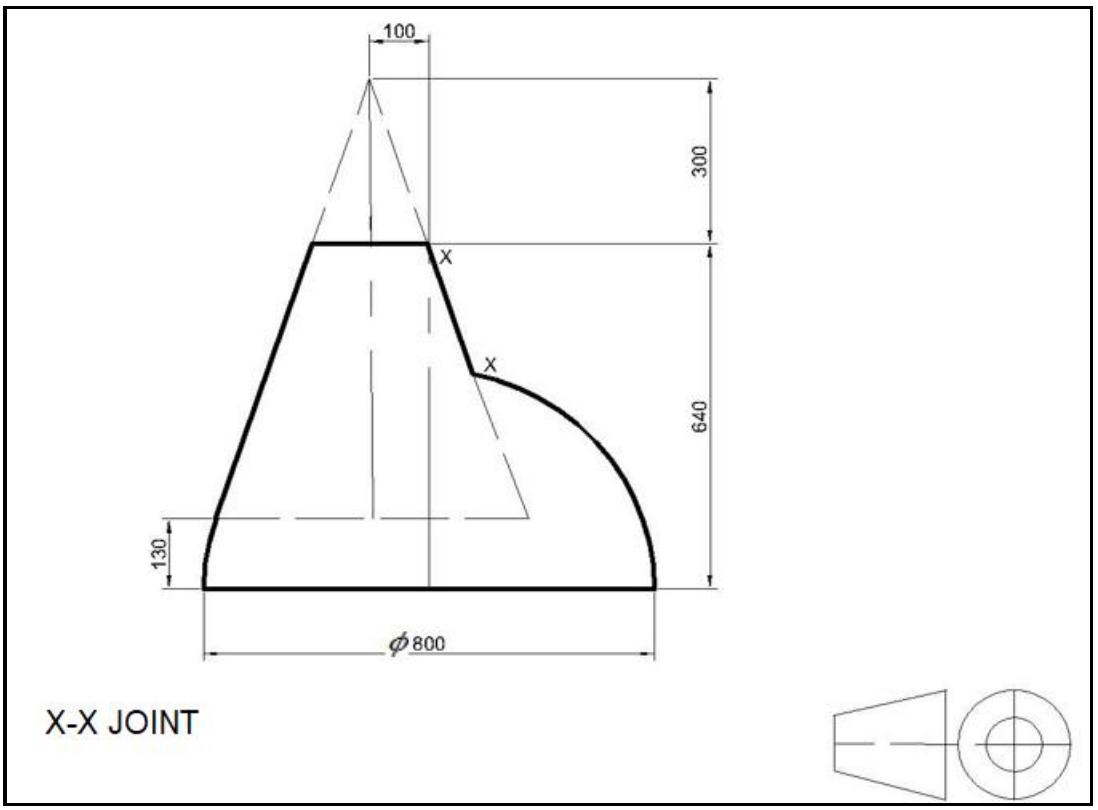

FIGURE 3

QUESTION 4

FIGURE 4, below, shows three views of a flared ventilator head that fits onto a squared duct in a woodwork workshop.

4.1 Draw the given views (5)

4.2 Develop the following patterns:

4.2.1 The back-panel A (5)

4.2.2 The throat panel B (4)

4.2.3 The side panel C (4)

Mark allocation for drawing office practice for the above question is as follows:

Mark allocation for line work (2)

Mark allocation for accuracy (2)

Mark allocation for neatness (2)

Mark allocation for title and scale (1)

SCALE 1:10 **[25]**

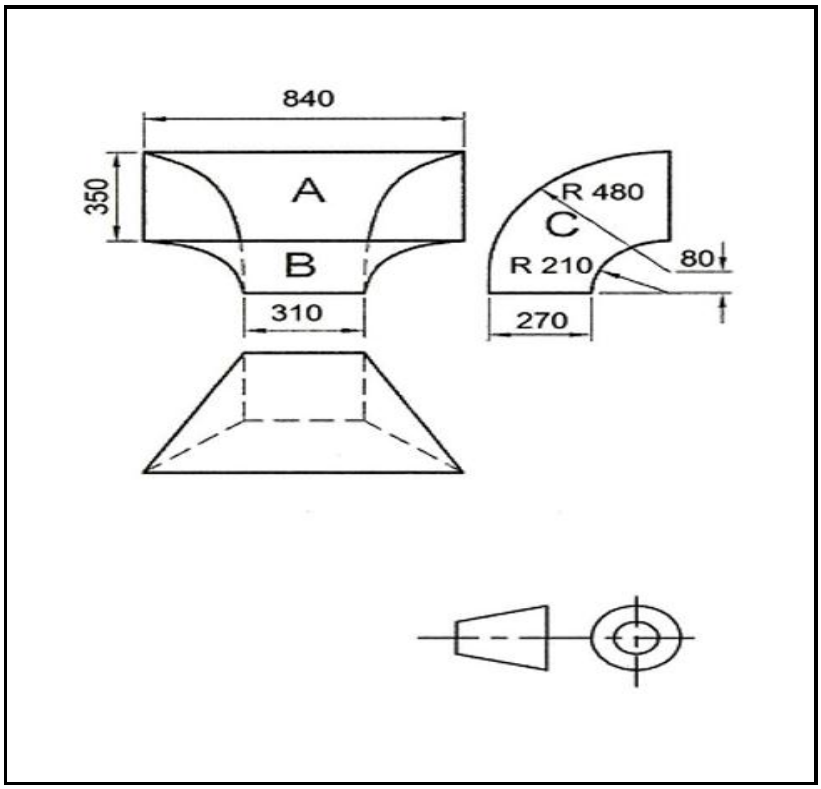

FIGURE 4

QUESTION 5

FIGURE 5, below, shows TWO views of an off-centre T-junction used in a pipe line in a water purifying plant.

5.1 Draw the given views. (3)

5.2 Draw the line of inter penetration (5)

5.3 Develop the shape of the branch pipe. (5)

5.4 Develop the shape of the hole in the main pipe (5)

Mark allocation for drawing office practice for the above question is as follows:

Mark allocation for line work (2)

Mark allocation for accuracy (2)

Mark allocation for layout and neatness (2)

Mark allocation for title and scale (1)

SCALE 1:1 **[25]**

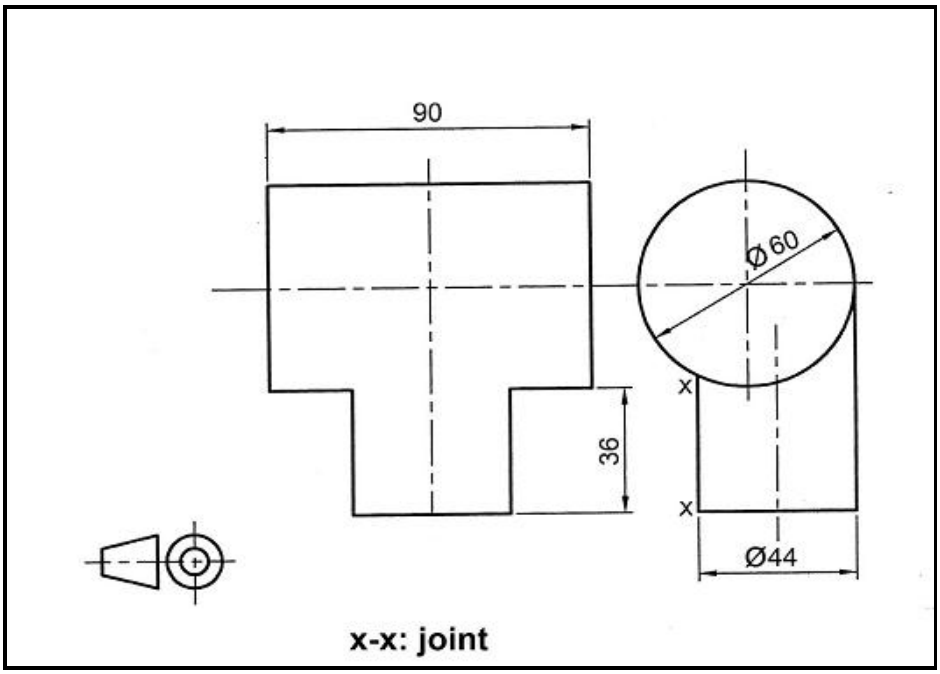

FIGURE 5

TOTAL: 100

Copyright reserved