higher education & training

Department:
Higher Education and Training
REPUBLIC OF SOUTH AFRICA

NATIONAL CERTIFICATE

PLATING AND STRUCTURAL STEEL DRAWING N3

(8090113)

1 April 2020 (X-paper)
09:00–13:00

REQUIREMENTS: ONE A2 drawing sheet

Calculators may be used.

This question paper consists of 7 pages.

Copyright reserved

DEPARTMENT OF HIGHER EDUCATION AND TRAINING
REPUBLIC OF SOUTH AFRICA

NATIONAL CERTIFICATE
PLATING AND STRUCTURAL STEEL DRAWING N3
TIME: 4 HOURS
MARKS: 100

NOTE: If you answer more than the required number of questions only the required number will be marked. Clearly cross out all work you do not want to be marked.

INSTRUCTIONS AND INFORMATION

1. Answer any FOUR questions.
2. Read all the questions carefully.
3. Number the answers according to the numbering system used in this question paper.
4. Show all construction lines.
5. Do TWO questions on the front and TWO questions on the reverse side of the DRAWING SHEET.
6. Add a title and the scale to each answer.
7. Marks will be allocated for neatness.

Copyright reserved

QUESTION 1

FIGURE 1 shows three views of an off-centred rectangular-to-rectangular transition piece. The transition piece has three slanting sides and one vertical front piece.

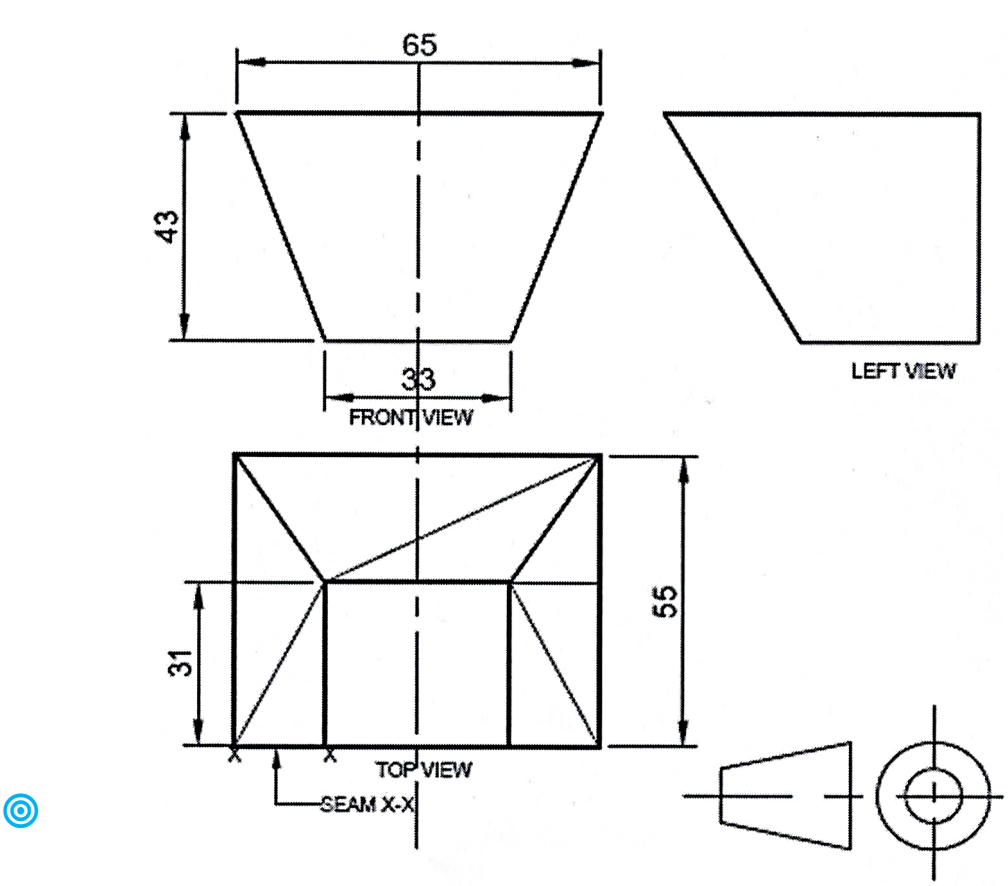

FIGURE 1

1.1 Draw, to scale 1:1, the THREE given views. (3)

1.2 Calculate the true lengths by showing all calculations on the drawing sheet. (9)

1.3 Use the information from QUESTION 1.2 to develop the full pattern of the transition piece. No marks will be awarded for lengths taken from a drawing to scale. (6)

Mark allocation for drawing office practice:

Line work	2
Accuracy	2
Neatness	2
Title and scale	1

(7)
[25]

Copyright reserved

QUESTION 2

FIGURE 2 shows two views of a hopper with converging planes. The kink knuckle is omitted.

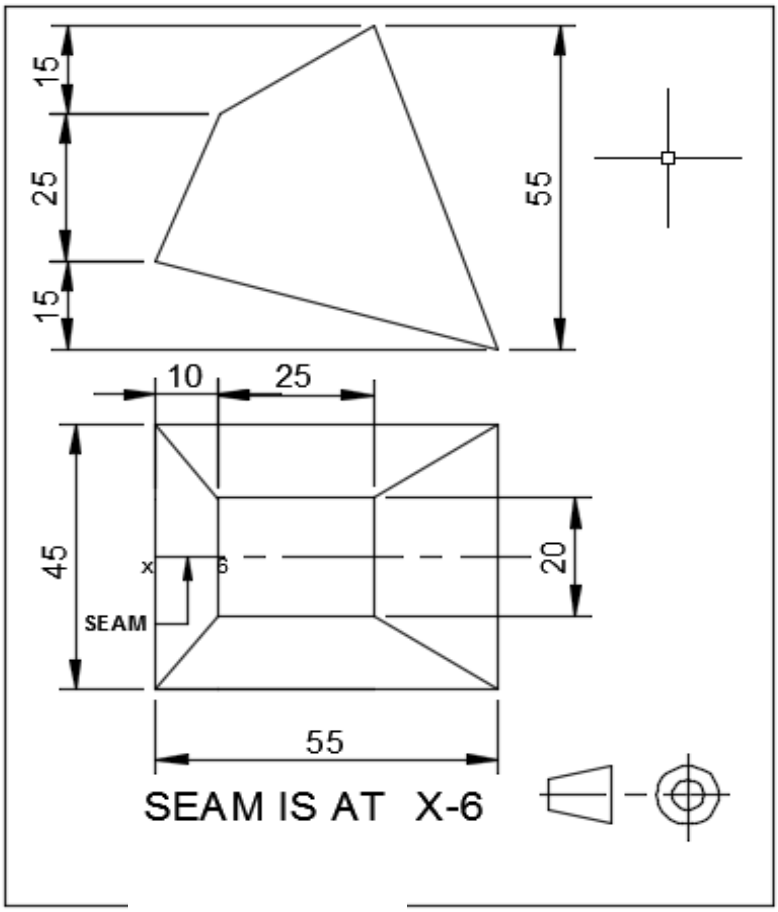

FIGURE 2

2.1 Draw, to scale 1:1, the TWO given views of the hopper. (2)

2.2 Draw a true-length diagram to the right of the front view and write down the true lengths that will be used to develop the plate for the hopper. (8)

2.3 Use the lengths from QUESTION 2.2 and develop the full pattern of the hopper using the triangulation method. (8)

Mark allocation for drawing office practice:

Line work	2
Accuracy	2
Neatness	2
Title and scale	1

(7)
[25]

Copyright reserved

QUESTION 3

FIGURE 3 shows an oblique conical hopper fitted on a cylindrical duct.

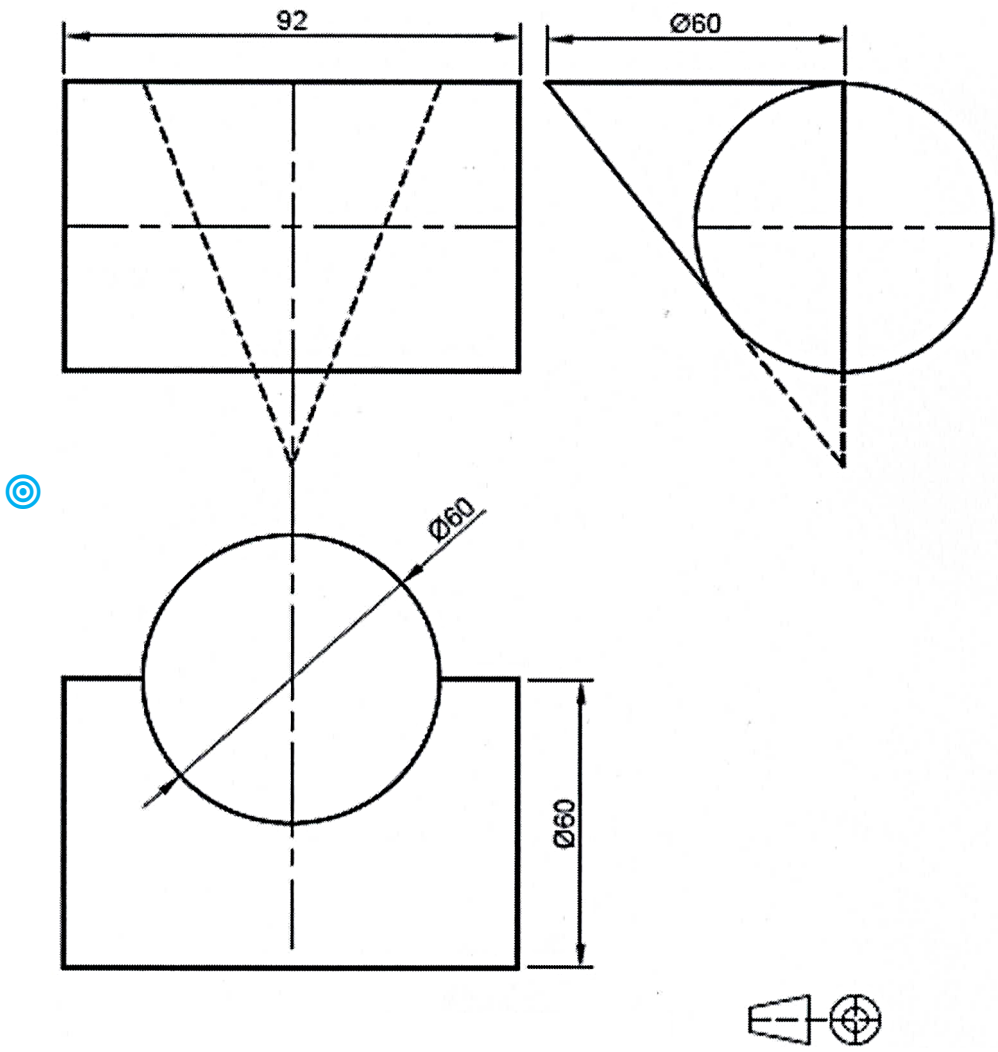

FIGURE 3

3.1 Draw, to scale 1:1, the given views. (3)

3.2 Determine the penetration line by construction. (8)

3.3 Develop the pattern of the conical hopper. (7)

Mark allocation for drawing office practice:

Line work	2
Accuracy	2
Neatness	2
Title and scale	1

(7)
[25]

QUESTION 4

FIGURE 4 shows the front and top views of a cone frustrum with an off-set branch pipe.

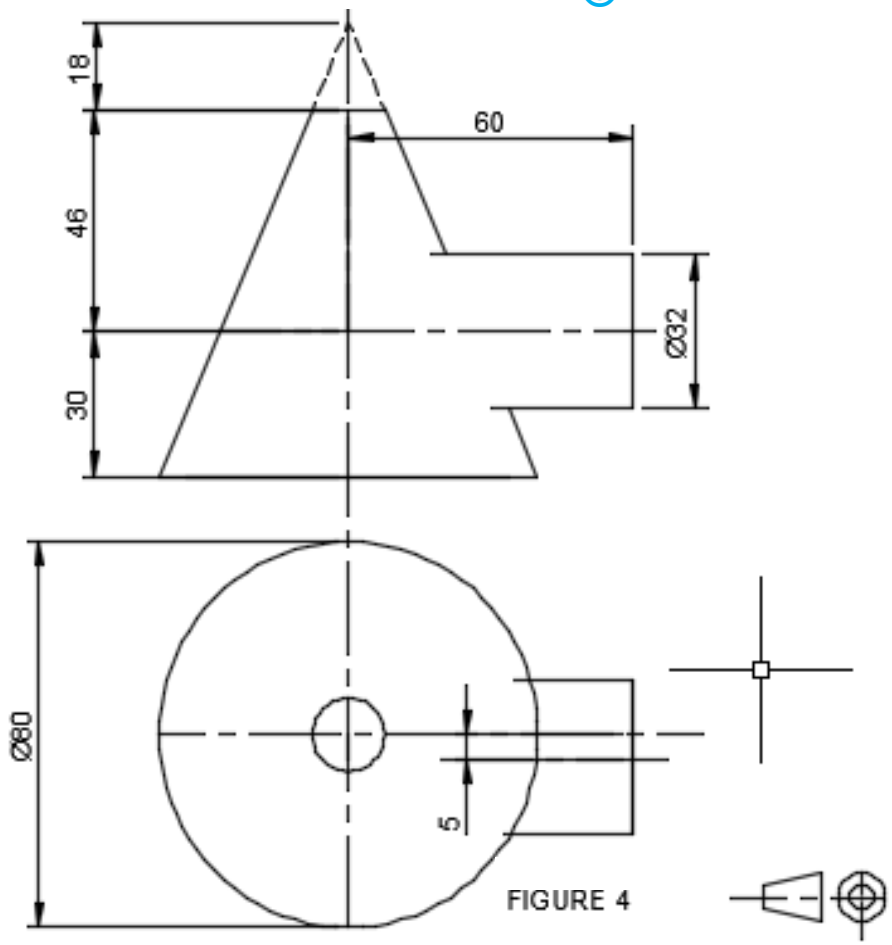

FIGURE 4

4.1 Draw, to scale 1:1, the front and top views. (2)

4.2 Draw, to scale 1:1, the left view showing the hidden detail of the off-centred branch pipe. (2)

4.3 Complete the top view including the interpenetration lines between the cone and the pipe. (5)

4.4 Complete the front view by including the interpenetration lines between the cone and the pipe. (5)

4.5 Develop the pattern for the branch pipe. (4)

Mark allocation for drawing office practice:

Line work	2
Accuracy	2
Neatness	2
Title and scale	1

(7)
[25]

QUESTION 5

FIGURE 5 shows the front view of a welded beam-to-beam connection. The two beams have a common centre line when drawing the top view.

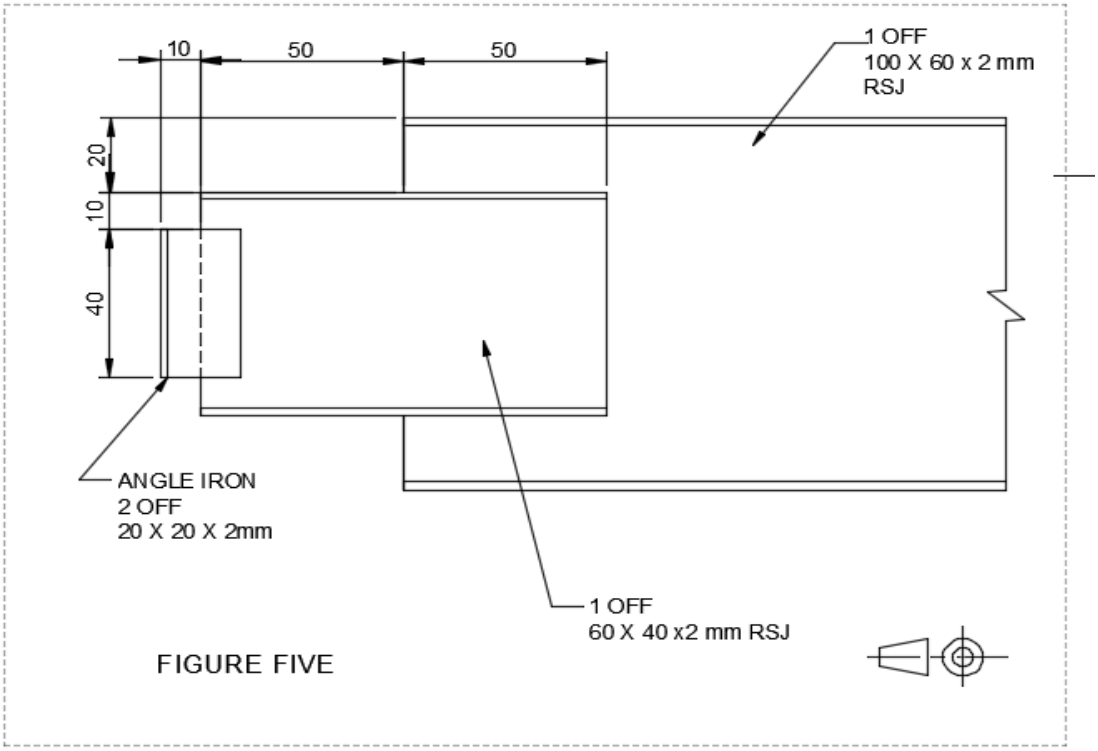

FIGURE 5

5.1 Draw, to scale 1:1, the following in first-angle orthographic projection:

5.1.1 The given front view (4)

5.1.2 The left view (6)

5.1.3 The top view (6)

5.2 Draw the projection symbol. (1)

Mark allocation for drawing office practice:

Line work	2
Accuracy	2
Neatness	2
Title and scale	2

(8)
[25]

TOTAL: 100

Copyright reserved