higher education & training

Department:
Higher Education and Training
REPUBLIC OF SOUTH AFRICA

MARKING GUIDELINE

NATIONAL CERTIFICATE

PLATING AND STRUCTURAL STEEL DRAWING N3

1 April 2020

This marking guideline consists of 9 pages.

THIS MARKING GUIDELINE CANNOT BE USED AS A MARKING TOOL AS IT IS NOT ACCORDING TO SCALE.

Copyright reserved

✓ = mark √ = ½ mark

QUESTION 1

PLATING AND STRUCTURAL STEEL
DRAWING N3
QUESTION ONE APRIL 2020

✓ = 1 MARK
√ = ½ MARK

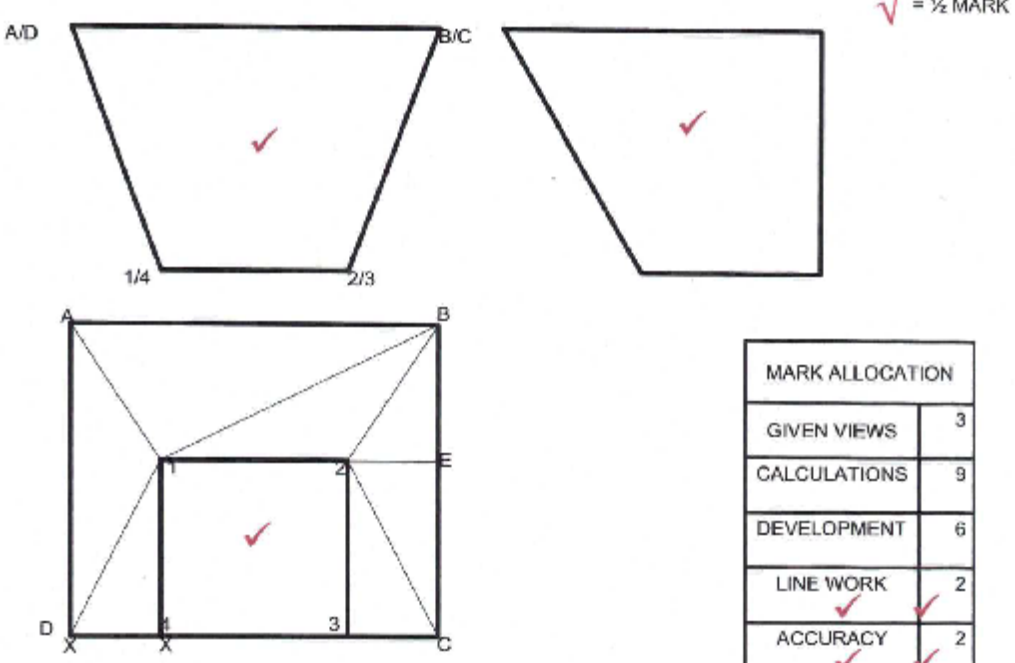

MARK ALLOCATION	
GIVEN VIEWS	3
CALCULATIONS	9
DEVELOPMENT	6
LINE WORK	2
ACCURACY	2
NEATNESS	2
TITLE AND SCALE	1
TOTAL	25

$D-4=\frac{65-33}{2}=16mm$ ✓

$D-4(TRUE)=\sqrt{16^2+43^2}=46mm$ ✓

$D-1(TRUE)=\sqrt{16^2+31^2+43^2}=55.4mm$ ✓

$B-E=55-33=24mm$ ✓

$\therefore B-1(TRUE)=\sqrt{24^2+(33-16)^2+43^2}=69.5mm$ ✓

$A-1(TRUE)=\sqrt{16^2+24^2+43^2}=51.8mm$ ✓

$C-2(TRUE)=\sqrt{16^2+31^2+43^2}=55.4mm$ ✓

$D-3(TRUE)=\sqrt{(33+16)^2+43^2}=55.2mm$ ✓

SUMMARY OF TRUE LENGTHS

$D-4=C-3=46mm$

$D-1=C-2=55.4mm$

$B-1=69.5mm$

$A-1=B-2=51.8mm$

$C-2=55.4mm$

$D-3=55.2mm$

√

OFF-CENTRED RECTANGULAR TO
RECTANGULAR TRANSITION PIECE
SCALE 1:1

PLATING AND STRUCTURAL STEEL
DRAWING N3
QUESTION ONE APRIL 2020

✓ = 1 MARK
√ = ½ MARK

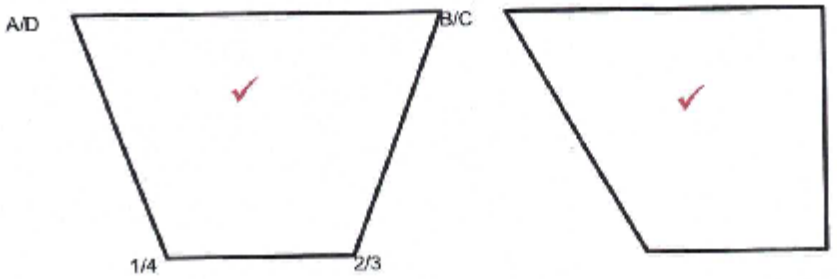

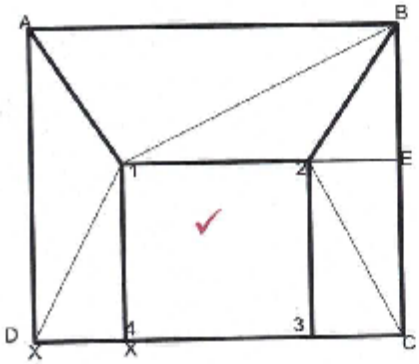

MARK ALLOCATION	
GIVEN VIEWS	3
CALCULATIONS	9
DEVELOPMENT	6
LINE WORK	2
ACCURACY	2
NEATNESS	2
TITLE AND SCALE	1
TOTAL	25

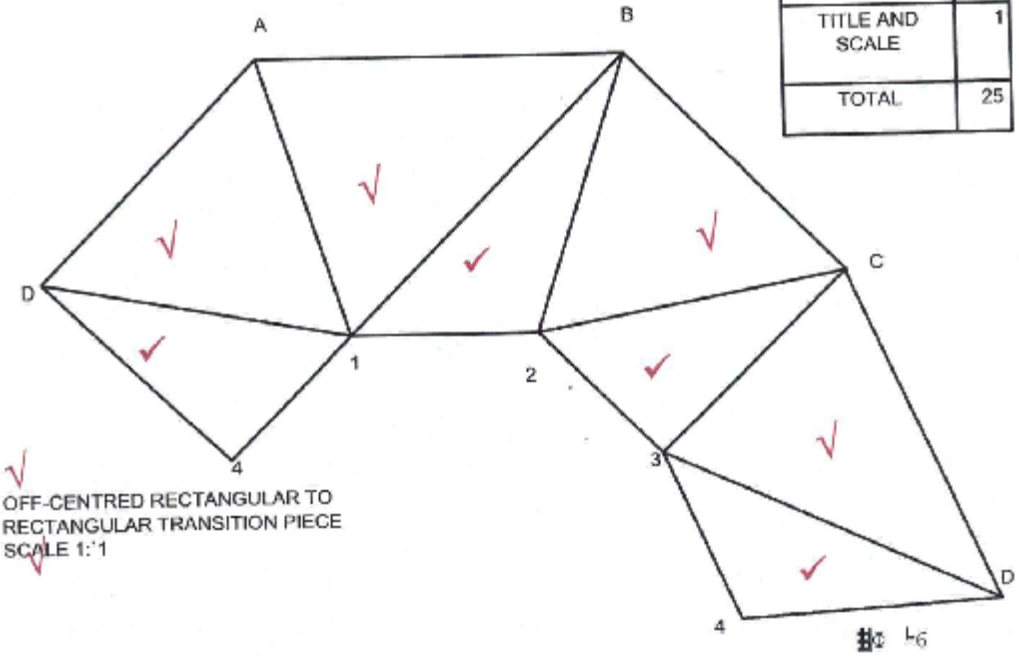

OFF-CENTRED RECTANGULAR TO
RECTANGULAR TRANSITION PIECE
SCALE 1:1

[25]

QUESTION 2

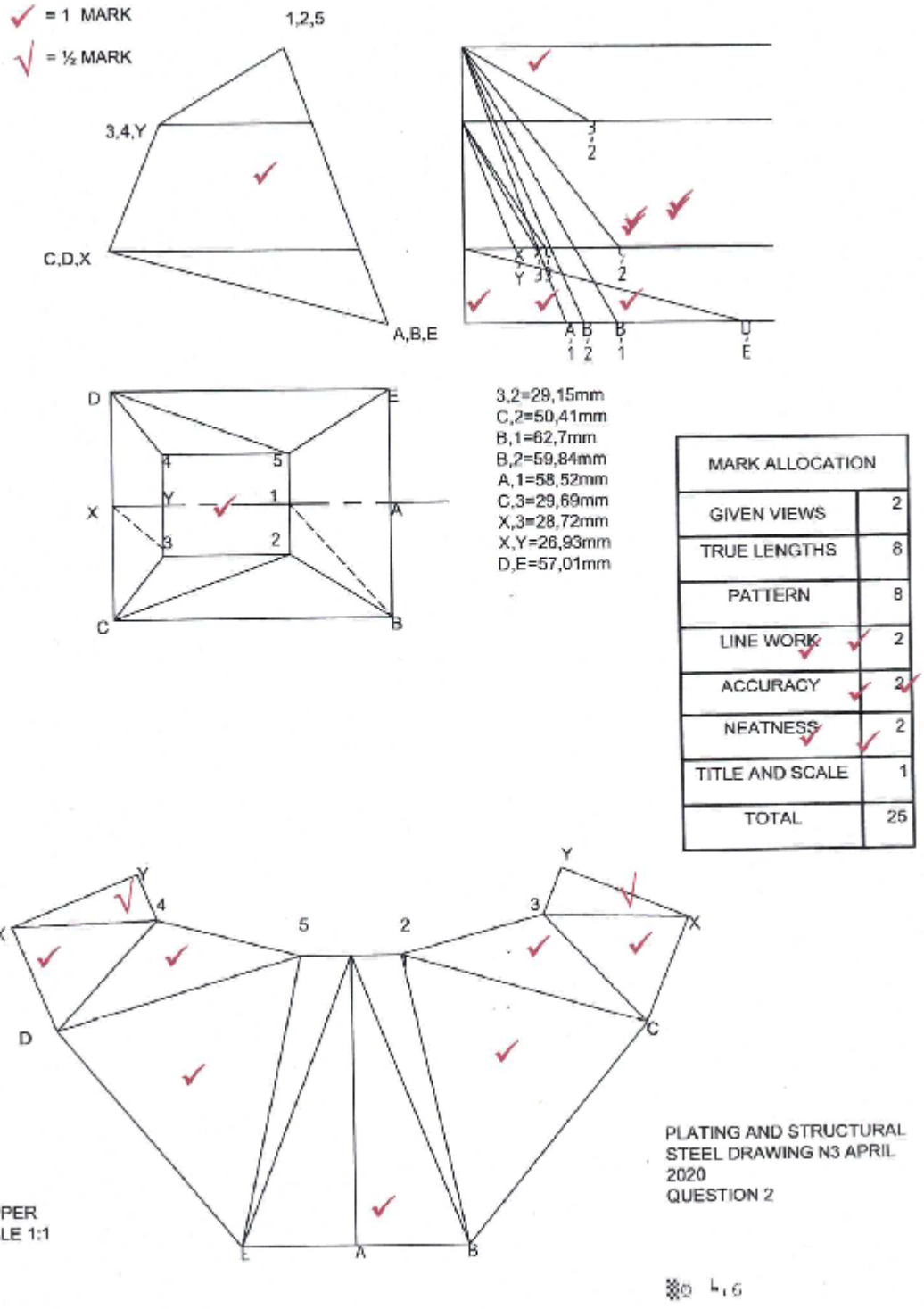

MARK ALLOCATION	
GIVEN VIEWS	2
TRUE LENGTHS	8
PATTERN	8
LINE WORK	2
ACCURACY	2
NEATNESS	2
TITLE AND SCALE	1
TOTAL	25

[25]

QUESTION 3

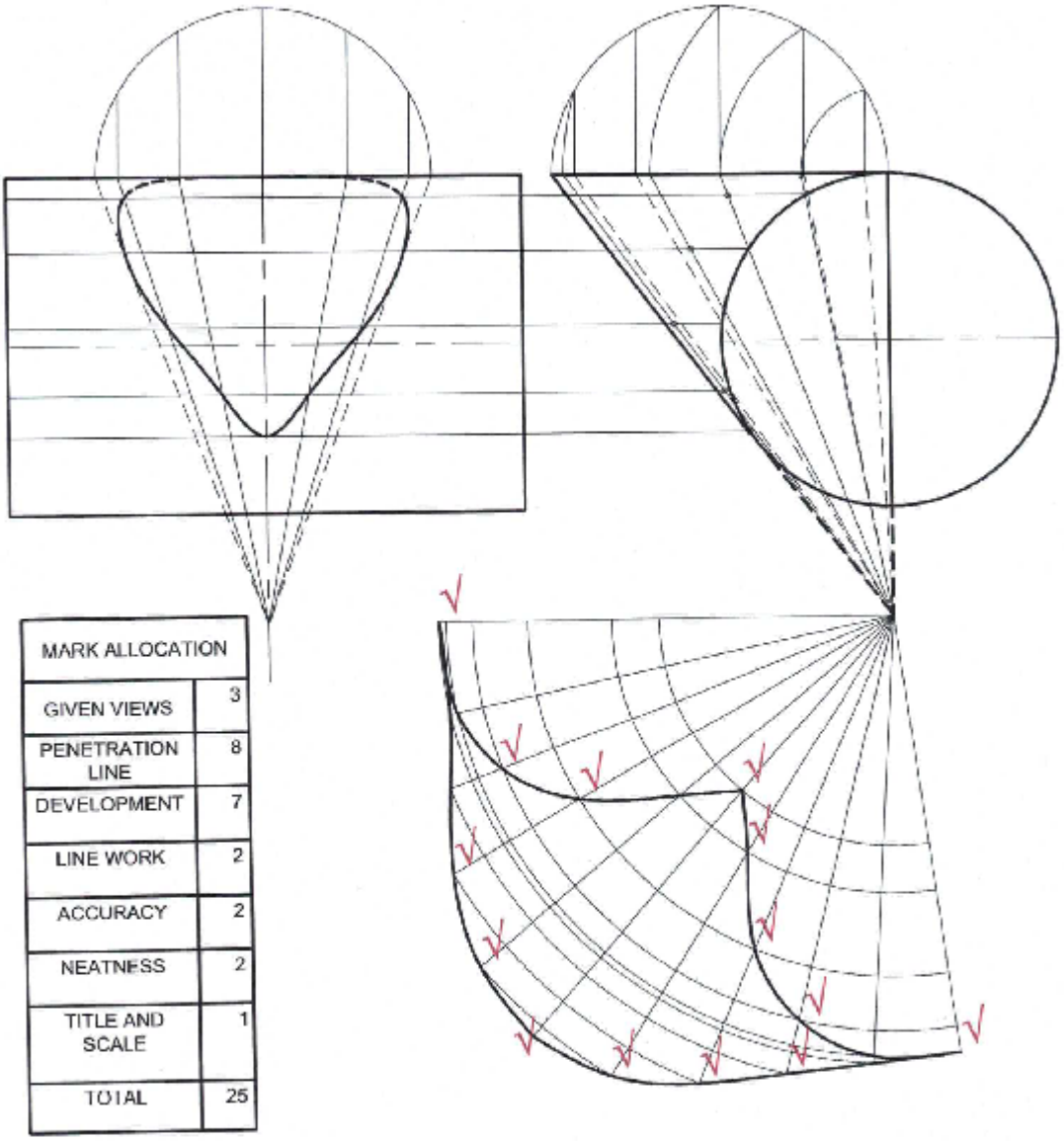

MARK ALLOCATION	
GIVEN VIEWS	3
PENETRATION LINE	8
DEVELOPMENT	7
LINE WORK	2
ACCURACY	2
NEATNESS	2
TITLE AND SCALE	1
TOTAL	25

PLATING AND STRUCTURAL STEEL
DRAWING N3
QUESTION 3 APRIL 2020

OBLIQUE CONICAL HOPPER
SCALE 1:1

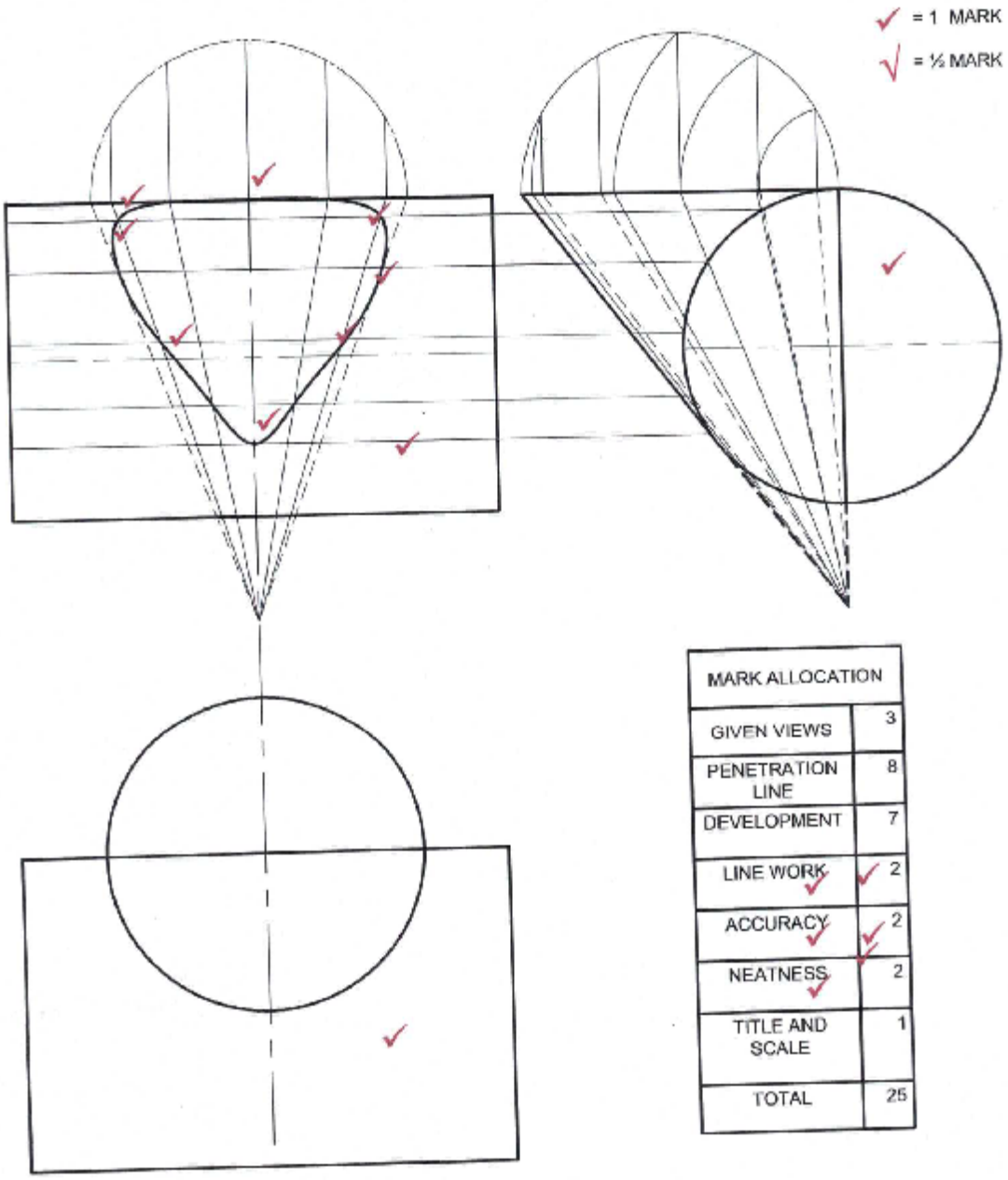

MARK ALLOCATION	
GIVEN VIEWS	3
PENETRATION LINE	8
DEVELOPMENT	7
LINE WORK	2
ACCURACY	2
NEATNESS	2
TITLE AND SCALE	1
TOTAL	25

PLATING AND STRUCTURAL STEEL
DRAWING N3
QUESTION 3 APRIL 2020

OBLIQUE CONICAL HOPPER
SCALE 1:1

[25]

QUESTION 4

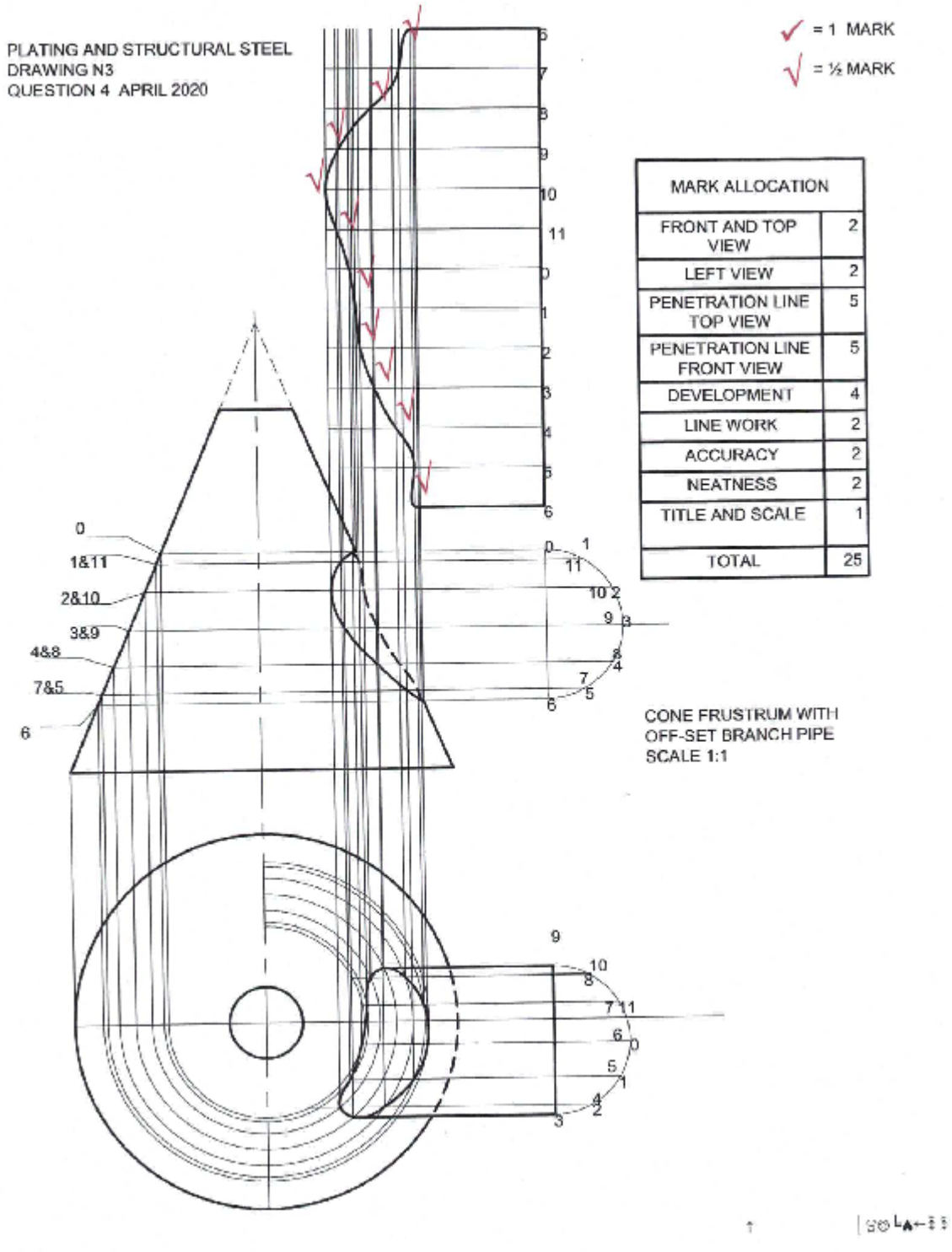

MARK ALLOCATION	
FRONT AND TOP VIEW	2
LEFT VIEW	2
PENETRATION LINE TOP VIEW	5
PENETRATION LINE FRONT VIEW	5
DEVELOPMENT	4
LINE WORK	2
ACCURACY	2
NEATNESS	2
TITLE AND SCALE	1
TOTAL	25

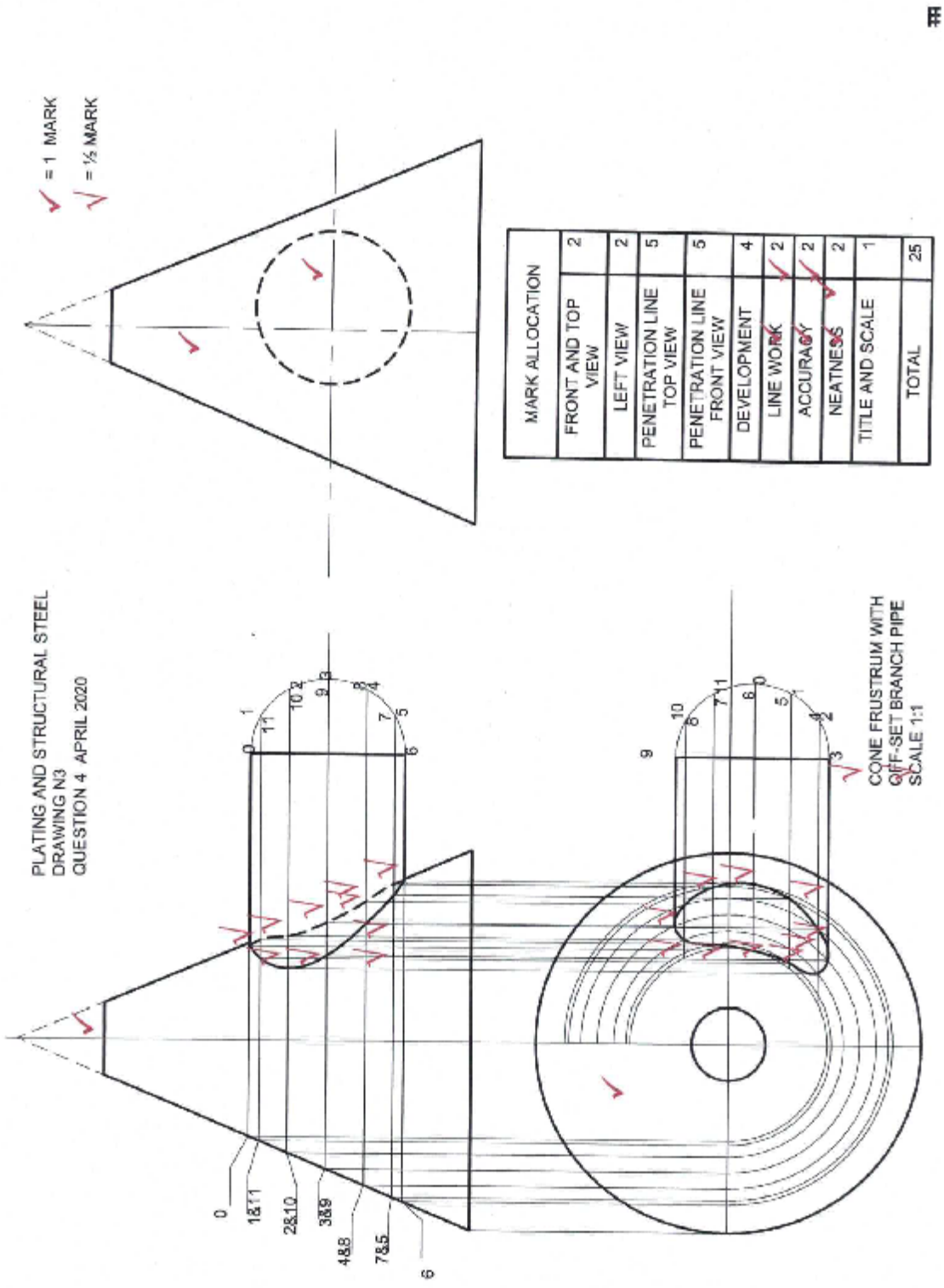
√ = 1 MARK
√ = ½ MARK
MARK ALLOCATION
FRONT AND TOP VIEW 2
LEFT VIEW 2
PENETRATION LINE TOP VIEW 5
PENETRATION LINE FRONT VIEW 5
DEVELOPMENT 4
LINE WORK 2
ACCURACY 2
NEATNESS 2
TITLE AND SCALE 1
TOTAL 25
PLATING AND STRUCTURAL STEEL
DRAWING N3
QUESTION 4 APRIL 2020
CONE FRUSTRUM WITH
OFF-SET BRANCH PIPE
SCALE 1:1
0
1&11
2&10
3&9
4&8
7&5
6

[25]

QUESTION 5

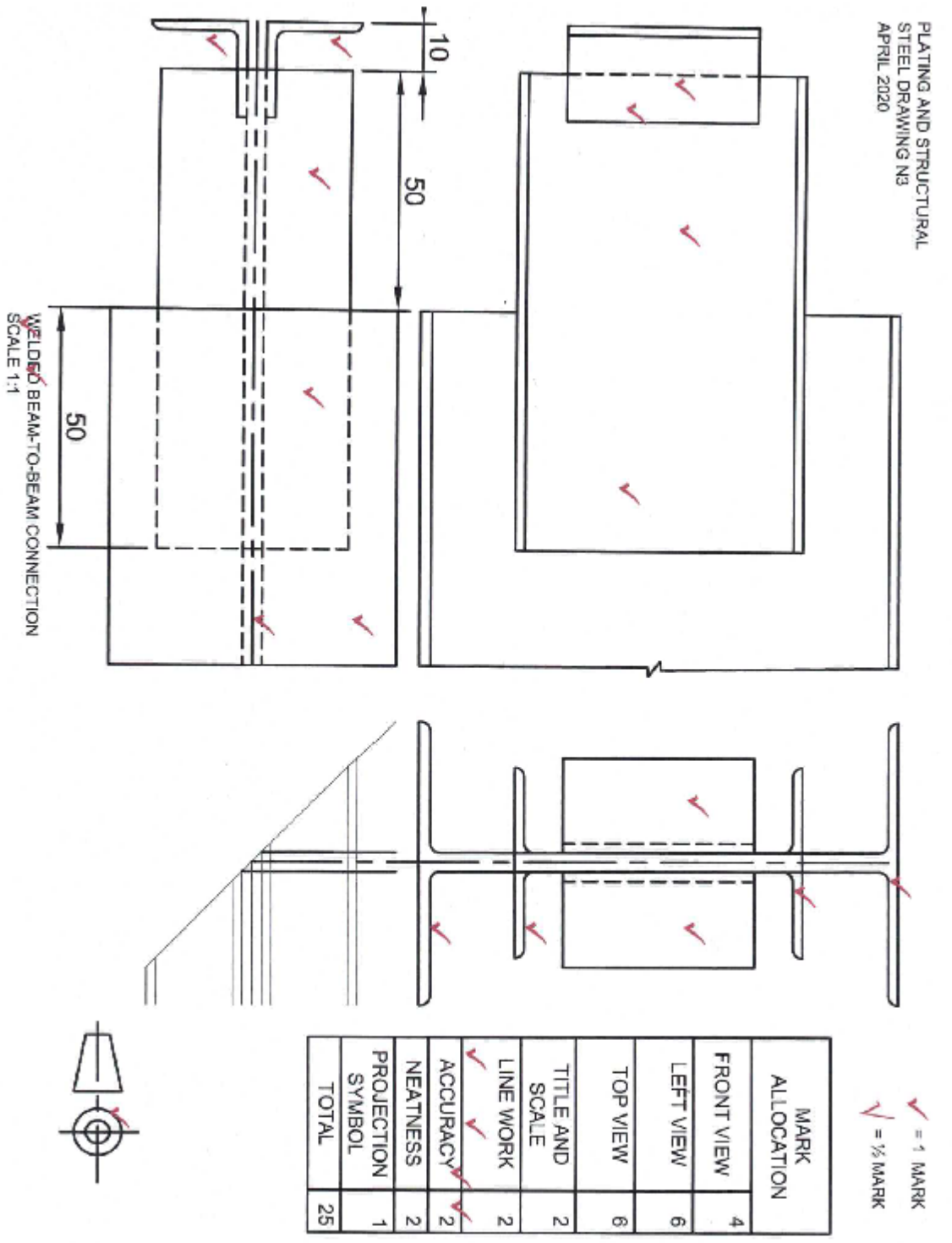

MARK ALLOCATION	
FRONT VIEW	4
LEFT VIEW	6
TOP VIEW	6
TITLE AND SCALE	2
LINE WORK	2
ACCURACY	2
NEATNESS	2
PROJECTION SYMBOL	1
TOTAL	25

[25]

TOTAL: 100

Copyright reserved