higher education & training

Department:
Higher Education and Training
REPUBLIC OF SOUTH AFRICA

T1350**(E)**(M28)T

NATIONAL CERTIFICATE

PLATING AND STRUCTURAL STEEL DRAWING N3

(8090113)

28 March 2018 (X-Paper)
09:00–13:00

REQUIREMENTS: ONE A2 drawing sheet

Nonprogrammable calculators and drawing instruments may be used.

This question paper consists of 5 pages and 3 diagram sheets.

Copyright reserved

DEPARTMENT OF HIGHER EDUCATION AND TRAINING
REPUBLIC OF SOUTH AFRICA

NATIONAL CERTIFICATE
PLATING AND STRUCTURAL STEEL DRAWING N3
TIME: 4 HOURS
MARKS: 100

NOTE: If you answer more than the required number of questions, only the required number will be marked. ALL work you do not want to be marked must be clearly crossed out.

INSTRUCTIONS AND INFORMATION

1. Answer any FOUR questions.
2. Read ALL the questions carefully.
3. Number the answers according to the numbering system used in this question paper.
4. Show ALL calculations on the DRAWING SHEET.
5. Insert dimensions, a title and the scale for each drawing.
6. Answer TWO questions on the front and TWO questions on the reverse side of the DRAWING SHEET.
7. Only ONE DRAWING SHEET may be used.
8. Write neatly and legibly.

Copyright reserved

QUESTION 1

FIGURE 1, DIAGRAM SHEET 1 (attached), shows the front and top views of a square-to-rectangular transition piece used in the ventilation system of a mall.

1.1 Draw the given views. (2)

1.2 Calculate the true lengths. (10)

1.3 Use the information from QUESTION 1.2 to develop the square-to-rectangular transition piece. (6)

NOTE: NO marks will be awarded for lengths taken directly from the DIAGRAM SHEET.

Scale 1 : 1

Mark allocation:

Linework	2
Accuracy	2
Layout and neatness	2
Title and scale	1

(7)
[25]

QUESTION 2

FIGURE 2, DIAGRAM SHEET 1 (attached), shows the front and top views of a transformer segment that connects a square duct and a cylindrical pipe used in a dust extraction plant in a furniture factory.

2.1 Draw the given views. (4)

2.2 Draw the auxiliary view segment ”B” (3)

2.3 Develop the pattern for the transformer segment “B” (11)

Scale 1 : 10

Mark allocation:

Linework	2
Accuracy	2
Layout and neatness	2
Title and scale	1

(7)
[25]

Copyright reserved

QUESTION 3

FIGURE 3, DIAGRAM SHEET 2 (attached), shows two views of an off-centre oblique T-piece used as a connector in a ducting system in a factory.

3.1 Draw the given views. (4)

3.2 Determine the penetration line between the square pipe and the cylindrical branch pipe. (8)

3.3 Develop the shape of the hole in the square pipe. (6)

Scale 1 : 1

Mark allocation:

Linework	2
Accuracy	2
Layout and neatness	2
Title and scale	1

(7)
[25]

QUESTION 4

FIGURE 4, DIAGRAM SHEET 2 (attached), shows an oblique conical hopper fitted on a cylindrical duct used in a ducting system in an office complex.

4.1 Draw the given view. (4)

4.2 Develop the pattern of the oblique conical hopper. (13)

Scale 1 : 10

Mark allocation:

Linework	3
Accuracy	2
Layout and neatness	2
Title and scale	1

(8)
[25]

Copyright reserved

QUESTION 5

FIGURE 5, DIAGRAM SHEET 3 (attached), shows a junction between a right cone and a hexagonal pipe used as the top inlet cover of a machine.

5.1 Draw the front view. (2)

5.2 Draw the top view. (1)

5.3 Determine the lines of penetration. (5)

5.4 Develop the shape of the hexagonal pipe. (5)

5.5 Develop the shape of the hole in the cone. (5)

Scale 1 : 1

Mark allocation:

Linework	2
Accuracy	2
Layout and Neatness	2
Title and Scale	1

(7)
[25]

TOTAL: 100

Copyright reserved

DIAGRAM SHEET 1

FIG. 1

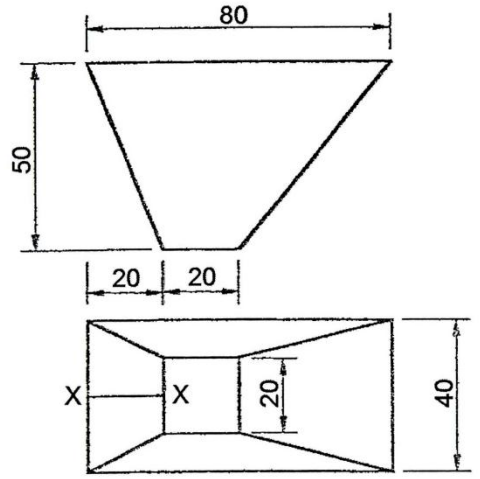

X-X = JOINT

FIG. 2

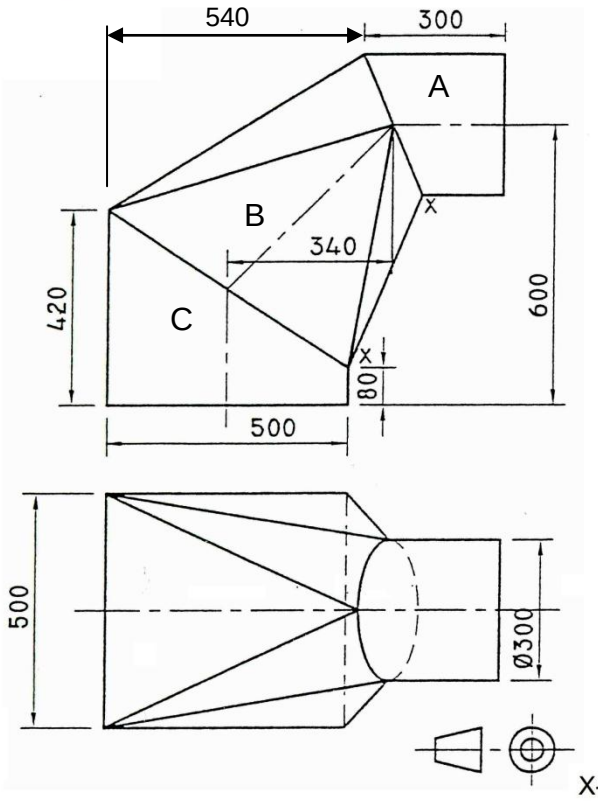

X-X = JOINT

Copyright reserved

DIAGRAM SHEET 2

FIG. 3

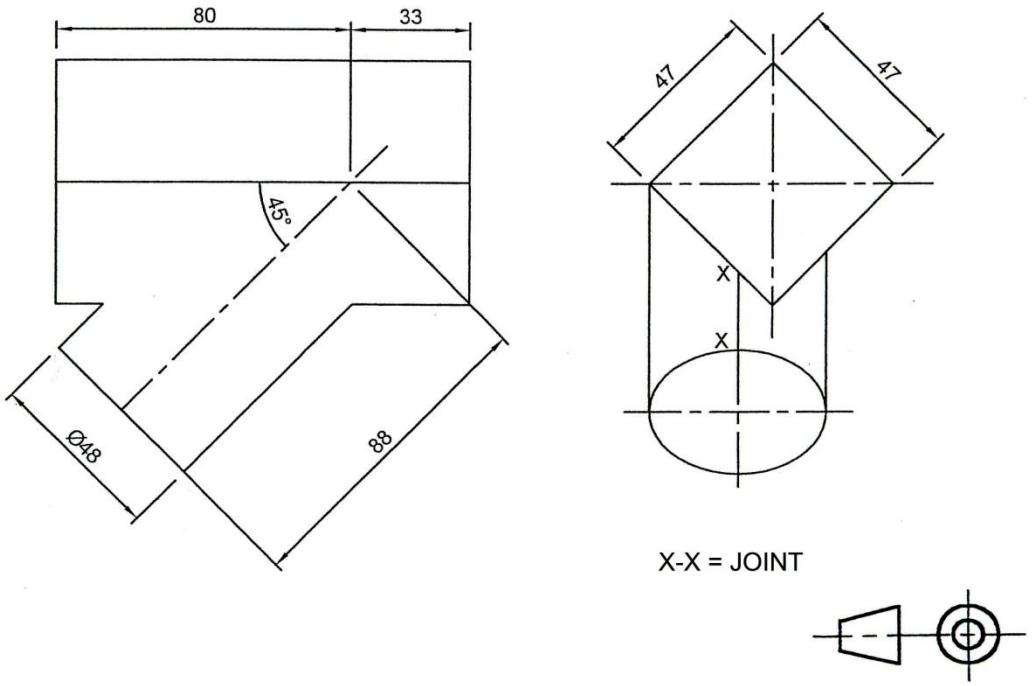

FIG. 4

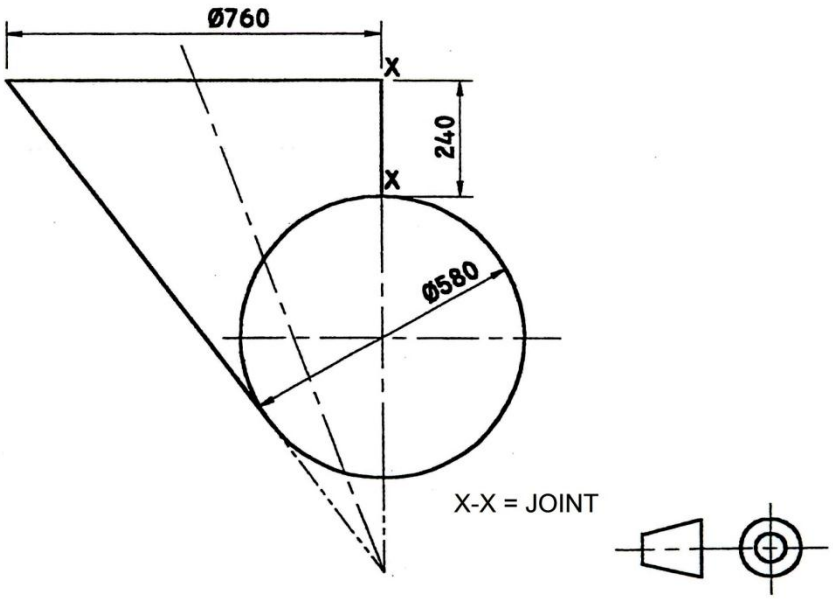

Copyright reserved

DIAGRAM SHEET 3

FIG. 5

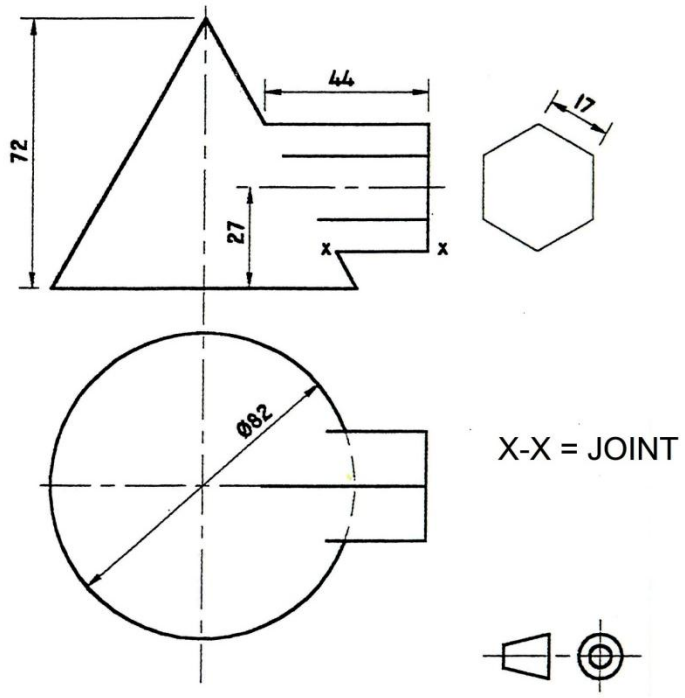

Copyright reserved