higher education & training

Department:
Higher Education and Training
REPUBLIC OF SOUTH AFRICA

MARKING GUIDELINE

NATIONAL CERTIFICATE

PLATING AND STRUCTURAL STEEL DRAWING N3

28 MARCH 2018

This marking guideline consists of 7 pages.

NOTE: The marking guideline cannot be used as a marking tool as it is not to scale and does not have any mark distribution

Copyright reserved

QUESTION 1

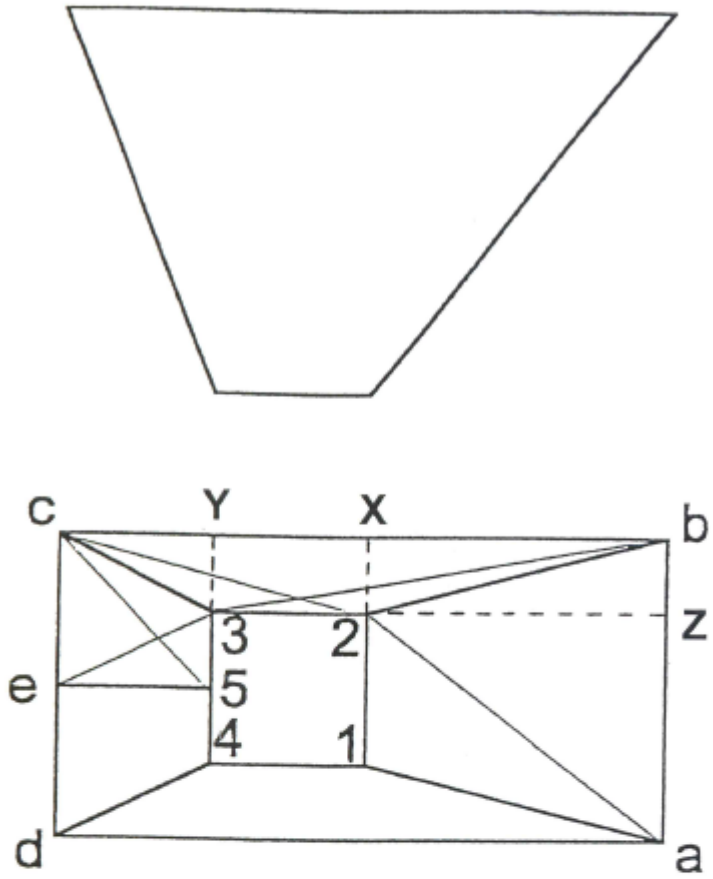

PLAN LENGTHS

$BX = 40mm \rightarrow$ (½)

$X2 = 10mm \rightarrow$ (½)

$B2 = \sqrt{BX^2 + X2^2}$

$= \sqrt{40^2 + 10^2}$

$= 41,231mm \rightarrow$ (1)

$CY = 20mm \rightarrow$ (1)

$Y3 = 10mm \rightarrow$ (1)

$C3 = \sqrt{CY^2 + Y3^2}$

$= \sqrt{20^2 + 10^2}$

$= 22,361mm \rightarrow$ (1)

$A2 = \sqrt{Z2^2 + AZ^2}$

$= \sqrt{40^2 + 30^2}$

$= 50mm \rightarrow$ (1)

TRUE LENGTHS

$B2 = \sqrt{41,231^2 + 50^2}$

$= 64,807mm \rightarrow$ (1)

$C3 = \sqrt{22,361^2 + 50^2}$

$= 54,772mm \rightarrow$ (1)

$E5 = \sqrt{20^2 + 50^2}$

$= 53,852mm \rightarrow$ (1)

$A2 = \sqrt{50^2 + 50^2}$

$= 70,711mm \rightarrow$ (1)

Copyright reserved

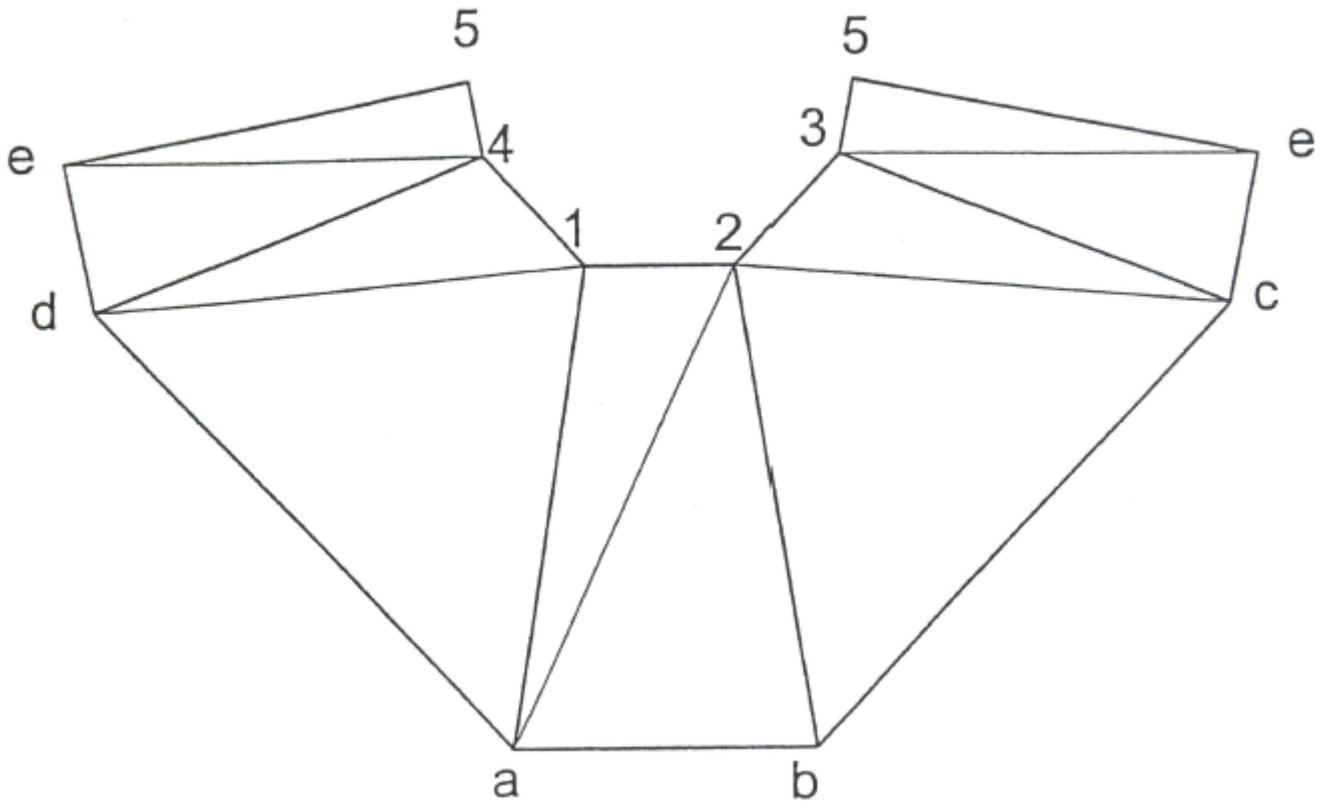

SQUARE-TO-RECTANGULAR TRANSITION PIECE
SCALE 1 : 1

Given views	2
Calculation of true lengths	10
Development	6
Line work	2
Accuracy	2
Layout and neatness	2
Title and scale	1
TOTAL:	**25**

[25]

QUESTION 2

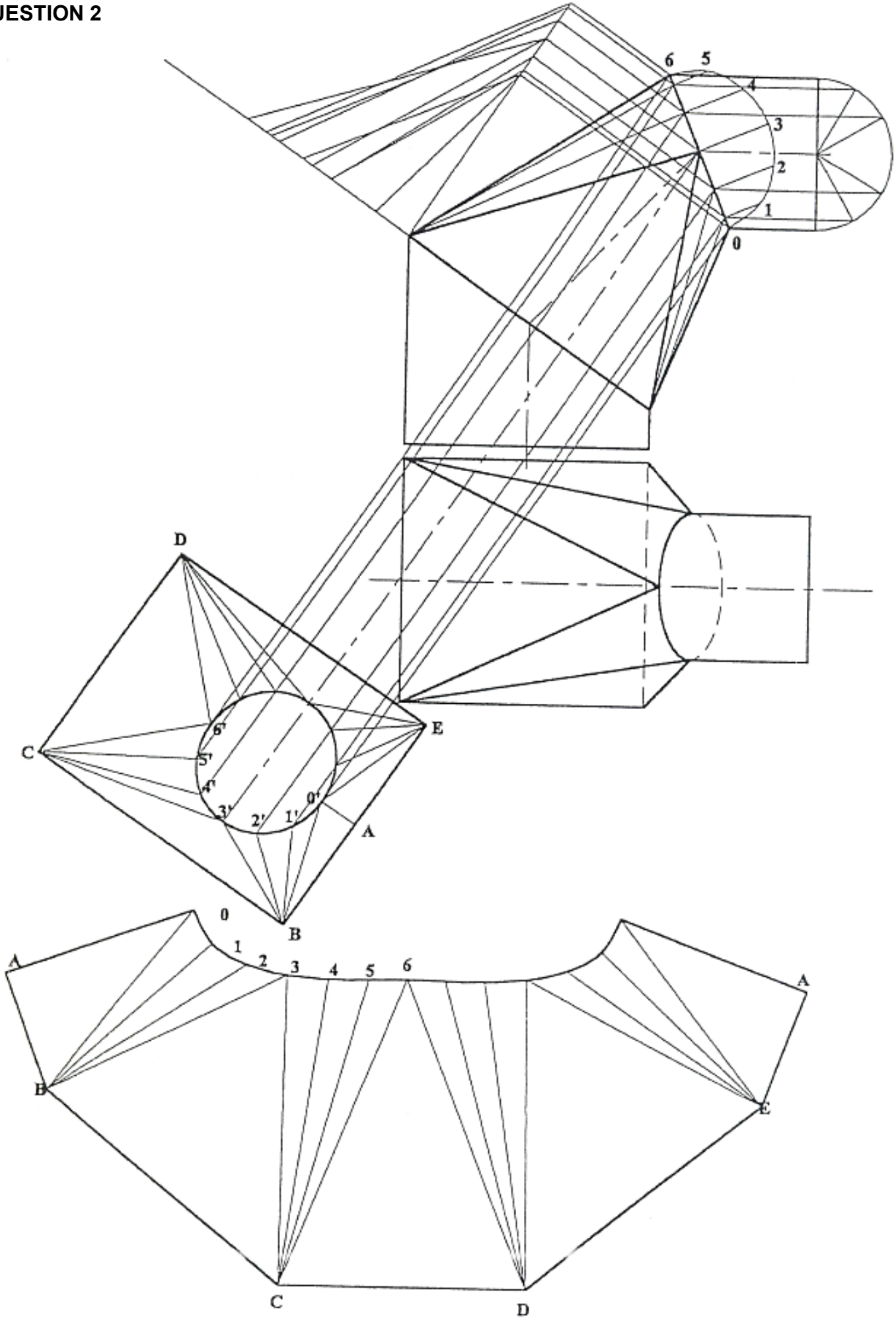

TRANSFORMER SEGMENT
SCALE 1 : 10

Copyright reserved

Given views	4
Auxiliary view	3
Development	11
Line work	2
Accuracy	2
Layout and neatness	2
Title and scale	1
TOTAL:	**25**

[25]

QUESTION 3

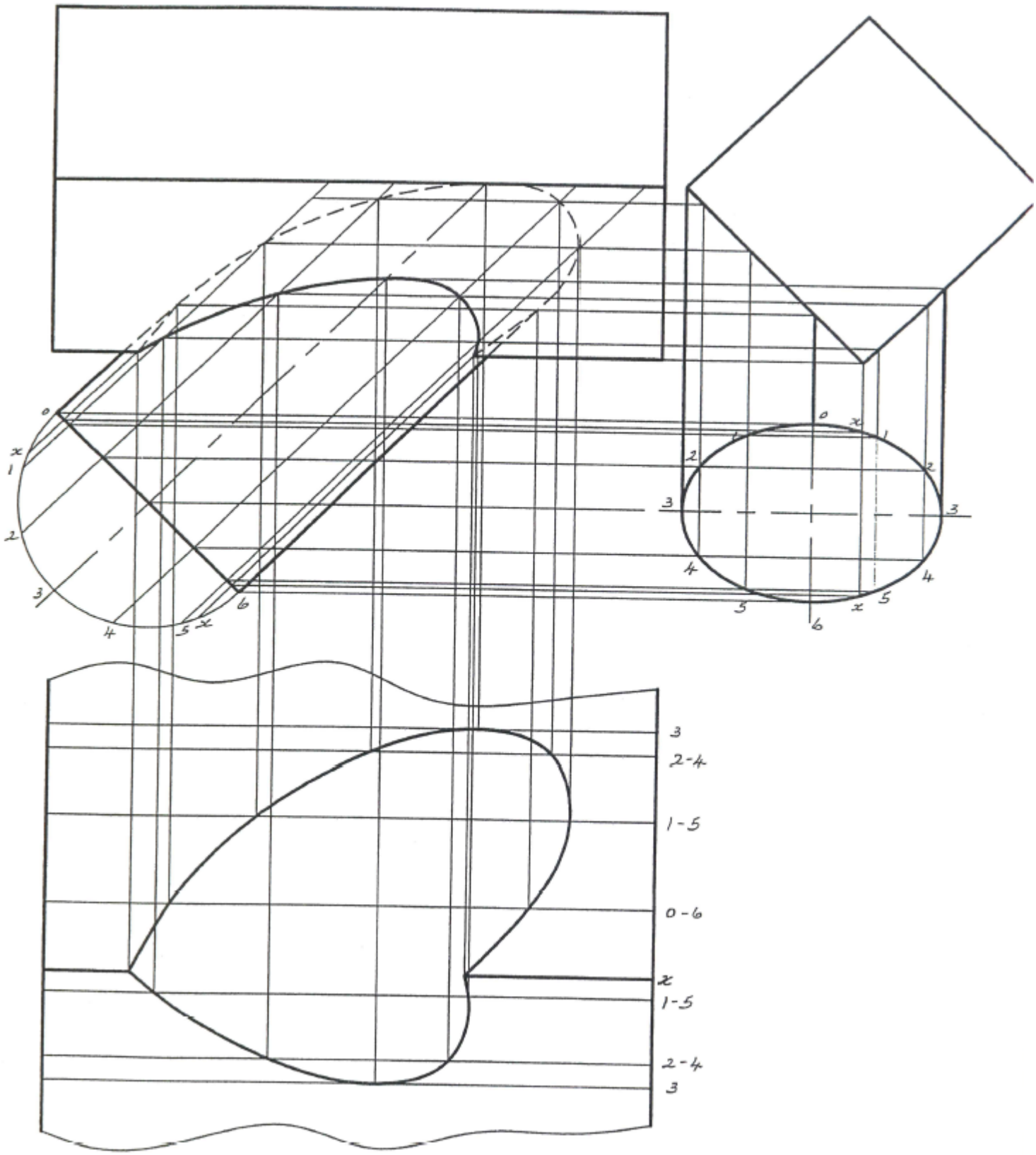

OBLIQUE T-PIECE
SCALE 1 : 1

Given views	4
Penetration line	8
Development	6
Line work	2
Accuracy	2
Layout and neatness	2
Title and scale	1
TOTAL:	**25**

[25]

QUESTION 4

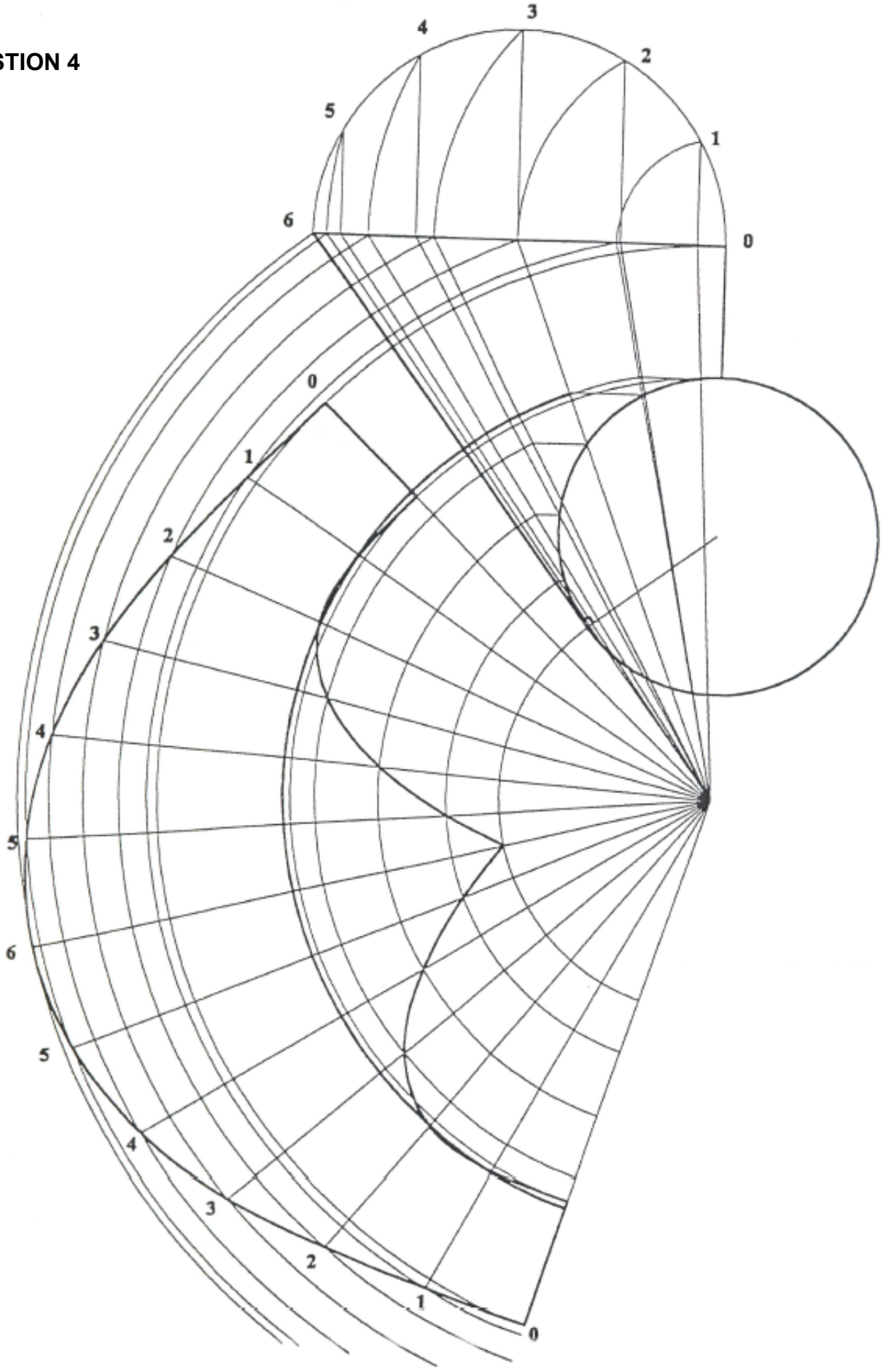

OBLIQUE CONICAL HOPPER
SCALE 1 : 10

Given views	4
Development	13
Line work	3
Accuracy	2
Layout and neatness	2
Title and scale	1
TOTAL:	**25**

[25]

Copyright reserved

QUESTION 5

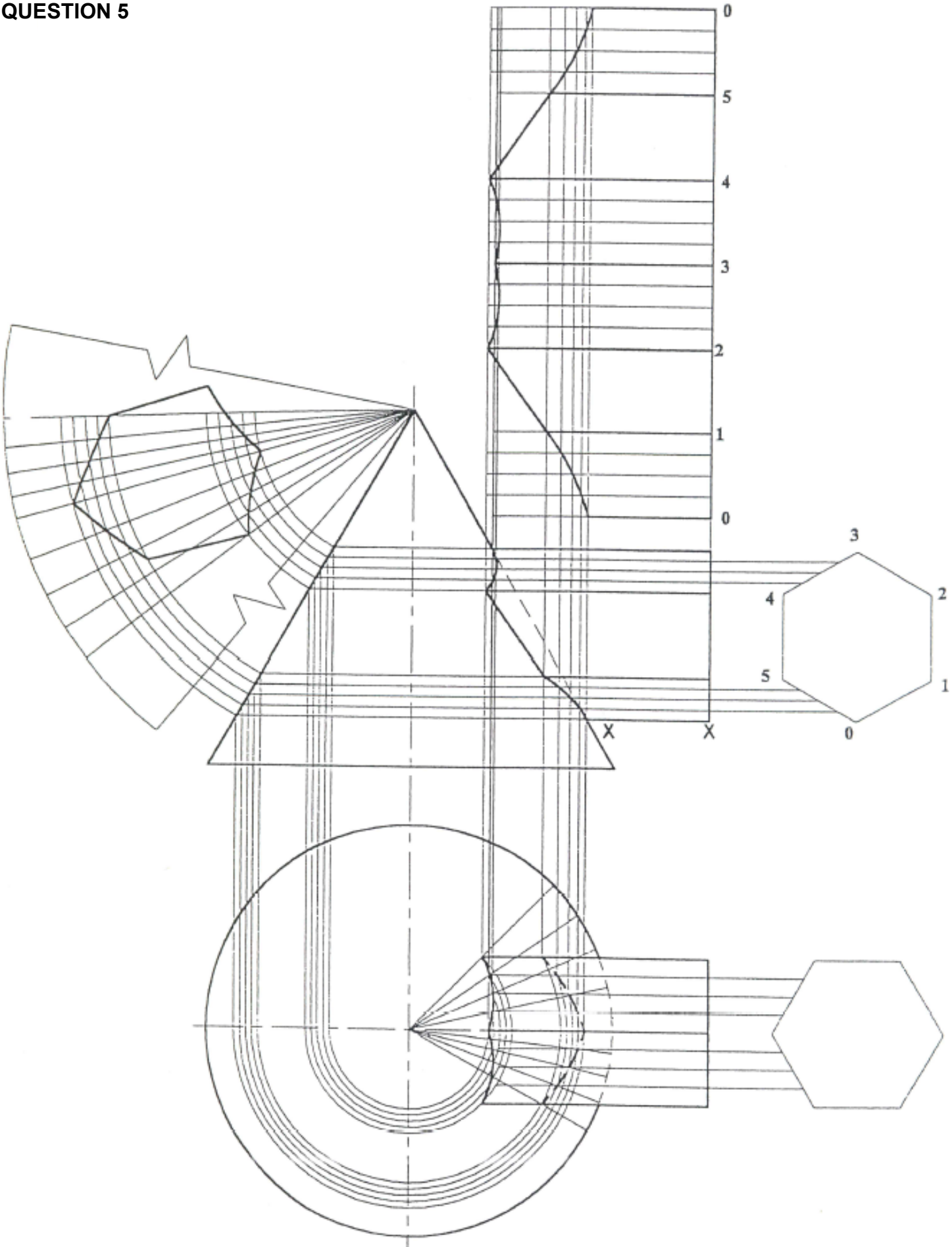

PIPE AND CONE JUNCTION
SCALE 1 : 1

Front view	2
Top view	1
Penetration line	5
Pattern of pipe	5
Shape of hole	5
Line work	2
Accuracy	2
Layout and neatness	2
Title and scale	1
TOTAL:	**25**

[25]

TOTAL: 100

Copyright reserved