higher education & training

Department:
Higher Education and Training
REPUBLIC OF SOUTH AFRICA

NASIENRIGLYN

NASIONALE SERTIFIKAAT

PLAATWERK- EN BOUSTAALTEKENE N3

18 November 2020

Hierdie nasienriglyn bestaan uit 9 bladsye.

OPMERKING: DIE NASIENRIGLYN IS NIE VOLGENS SKAAL NIE EN TYDENS DIE RIGLYNBESPREKING EN NASIEN MOET DIE OORSPRONKLIKES EN "THERMALS" GEBRUIK WORD

Kopiereg voorbehou

✓ = punt √ = ½ halfpunt

VRAAG 1

Plating and Structural Steel Drawing
N3
November 2020
Question ONE

✓ = 1 MARK
√ = ½ MARK

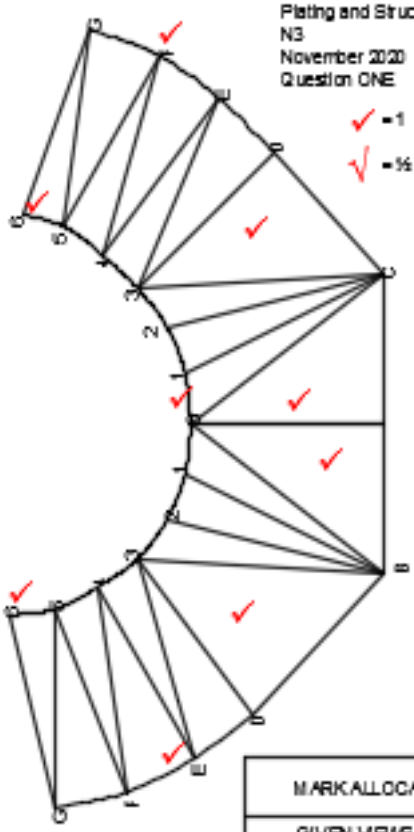

HOPPER
SCALE 1:1

MARK ALLOCATION	
GIVEN VIEWS	2
CALCULATIONS	10
PATTERN OF PLATE	9
DIMENSION	2
LINE WORK	2
TOTAL	25

CD = 22 mm
CD = AB
C – O = $\sqrt{28^2 + 14^2 + 26^2}$ = 47,407 mm
x – O = $\sqrt{14^2 + 26^2}$ = 29,62 mm
C – 1 = $\sqrt{(28 - \sin 30° \times 16)^2 + (22 - \sin 60° \times r)^2 + 26^2}$
= $\sqrt{(28 - 0,5 \times 16)^2 + (22 - 0,866 \times 16)^2 + 26^2}$
= $10^2 + 16,142^2 + 26^2$
= 42,79 mm
D – 2 = $\sqrt{10^2 + 26^2}$ = 27,86 mm
C – 2 = $\sqrt{(28 - \sin 60° \times 16)^2 + (22 - \sin 30° \times 16)^2 + 26^2}$
= $\sqrt{(28 - 0,866 \times 16)^2 + (22 - 0,5 \times 16)^2 + 26^2}$
= $12,413^2 + 23^2 + 26^2$
= 44,41 mm
C – 3 = $\sqrt{23^2 + (28 - 16)^2 + 26^2}$
= 49,19 mm
y – E = sin 30° x R = sin30° x 28 = 14
y – D = R – Sin60° x R
= 28 – Sin60° x 28 = 3,752 mm
y – 3 = D3 – yD = 10 – 3,752 = 6,248 mm
E – 3 = $\sqrt{6,248^2 + 14^2 + 26^2}$ = 29,12mm
OR
E – 3 = $\sqrt{(\sin 60° \times 28 - [R - r])^2 + (\sin 30° \times 28 \times R)^2 + h}$
= $\sqrt{(24,248 - 16)^2 + 14^2 + 26^2}$
E – 3 = 29,12mm

[25]

VRAAG 2

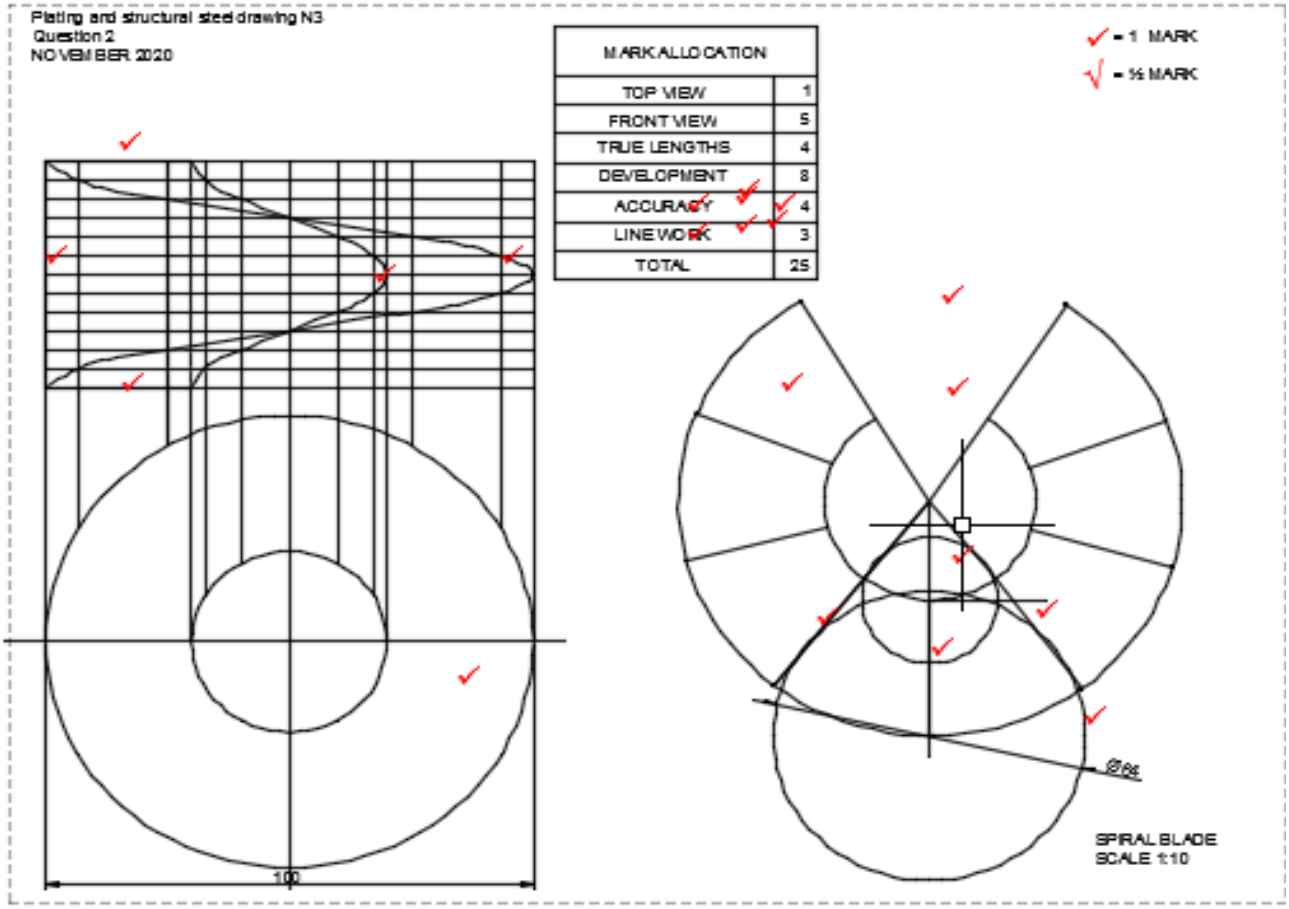
Plating and structural steel drawing N3
Question 2
NOVEMBER 2020
MARK ALLOCATION
TOP VIEW 1
FRONT VIEW 5
TRUE LENGTHS 4
DEVELOPMENT 8
ACCURACY 4
LINE WORK 3
TOTAL 25
✓ = 1 MARK
√ = ½ MARK
100
Ø84
SPIRAL BLADE
SCALE 1:10

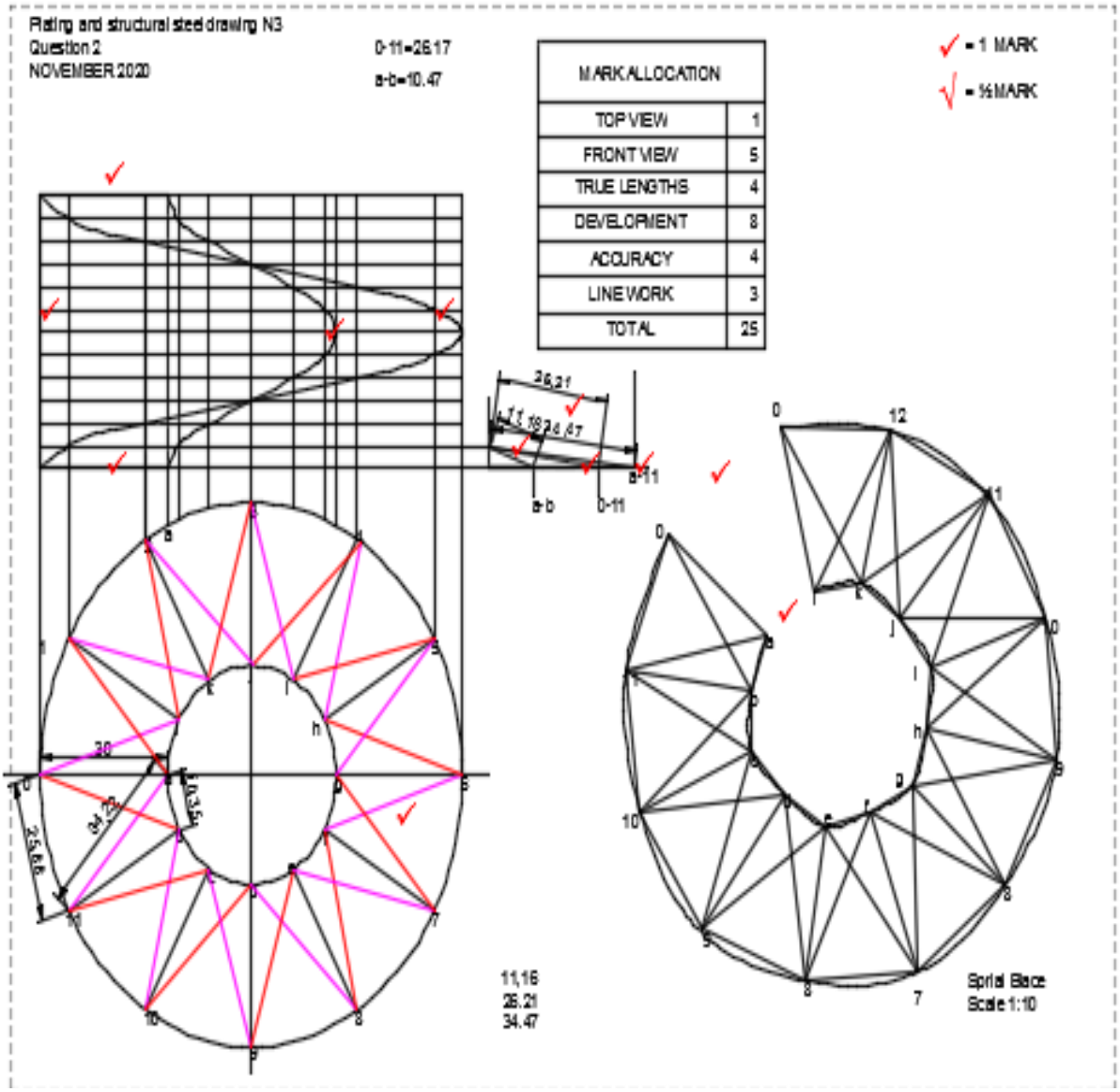
Plating and structural steel drawing N3
Question 2
NOVEMBER 2020
0-11=26.17
a-b=10.47
MARK ALLOCATION
TOP VIEW 1
FRONT VIEW 5
TRUE LENGTHS 4
DEVELOPMENT 8
ACCURACY 4
LINEWORK 3
TOTAL 25
= 1 MARK
= ½ MARK
26,21
34,47
a-11
a-b
0-11
30
11,16
26,21
34,47
Spiral Stairs
Scale 1:10

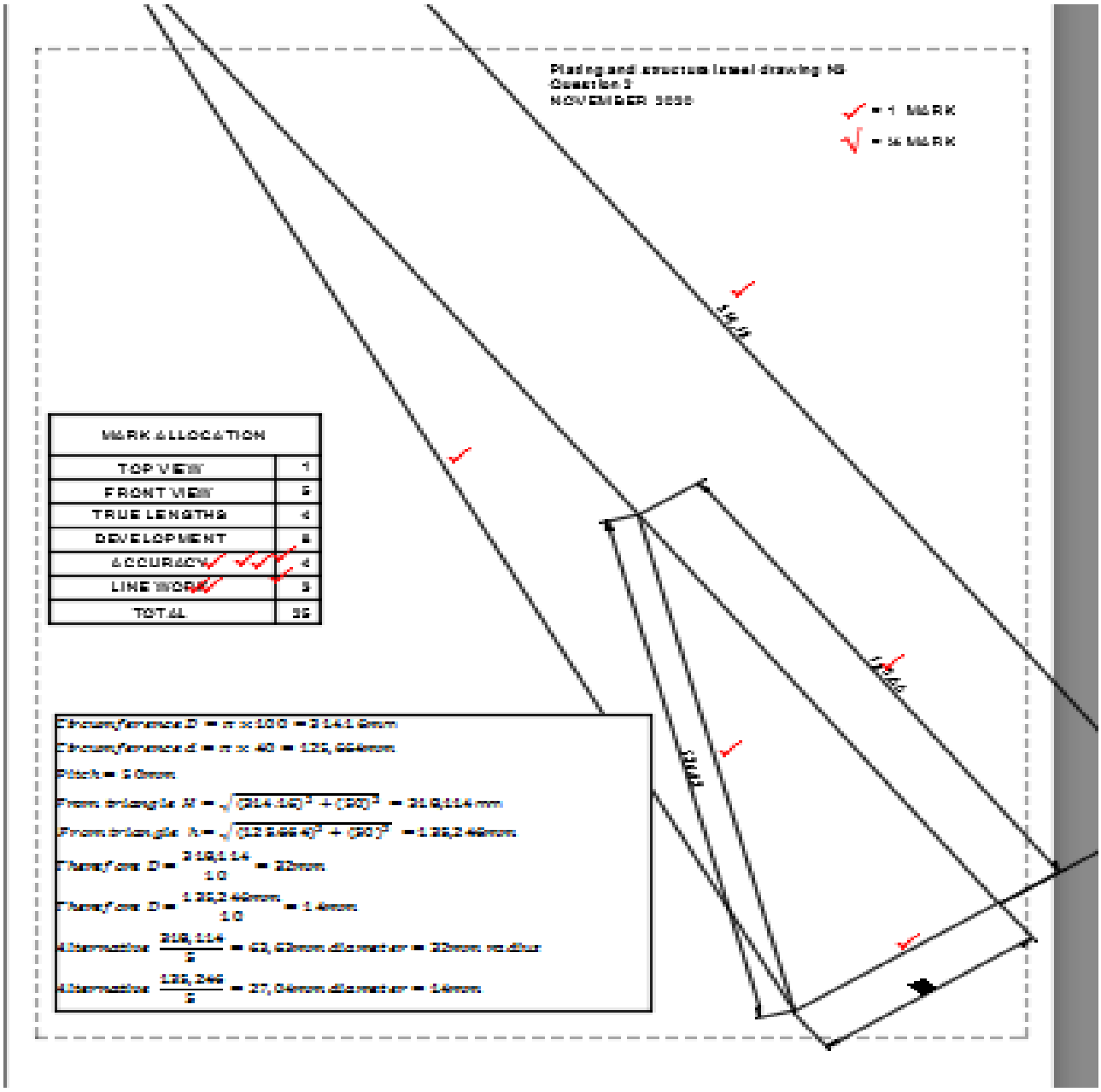
Plating and structural steel drawing N3
Question 3
NOVEMBER 2020
✓ = 1 MARK
√ = ½ MARK
MARK ALLOCATION
TOP VIEW 7
FRONT VIEW 5
TRUE LENGTHS 4
DEVELOPMENT 8
ACCURACY 4
LINE WORK 3
TOTAL 35
Circumference D = π x 100 = 314,16mm
Circumference d = π x 40 = 125,664mm
Pitch = 20mm
From triangle N = √((314,16)² + (20)²) = 314,916 mm
From triangle N = √((125,664)² + (20)²) = 135,248mm
Therefore D = 314,16 / 10 = 32mm
Therefore D = 135,248mm / 10 = 14mm
Alternative 314,16 / 5 = 62,83mm diameter = 32mm radius
Alternative 135,248 / 5 = 27,04mm diameter = 14mm

[25]

VRAAG 3

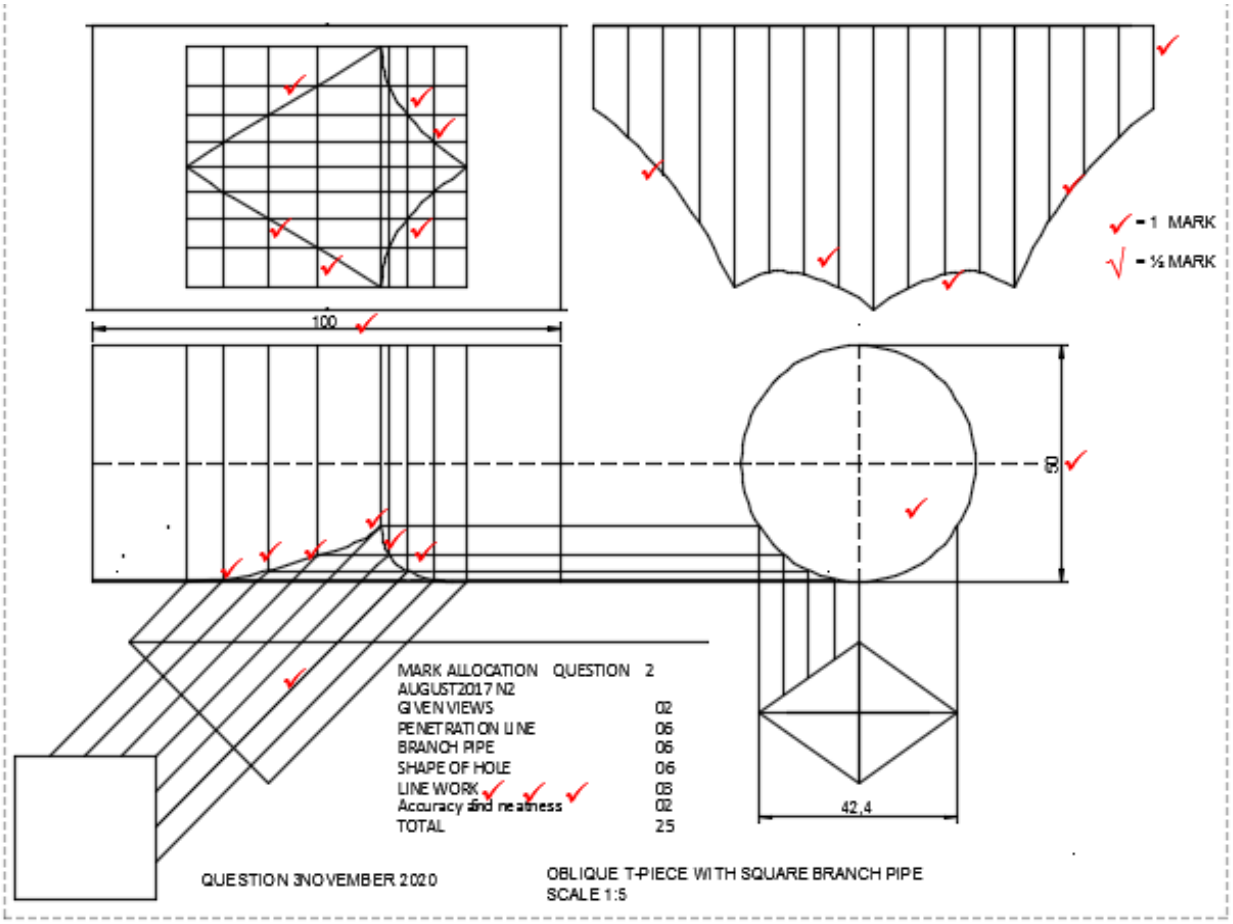
✓ = 1 MARK
√ = ½ MARK
100
60
42,4
MARK ALLOCATION QUESTION 2
AUGUST2017 N2
GIVEN VIEWS 02
PENETRATION LINE 06
BRANCH PIPE 06
SHAPE OF HOLE 06
LINE WORK 05
Accuracy and neatness 02
TOTAL 25
QUESTION 3NOVEMBER 2020
OBLIQUE T-PIECE WITH SQUARE BRANCH PIPE
SCALE 1:5

VRAAG 4

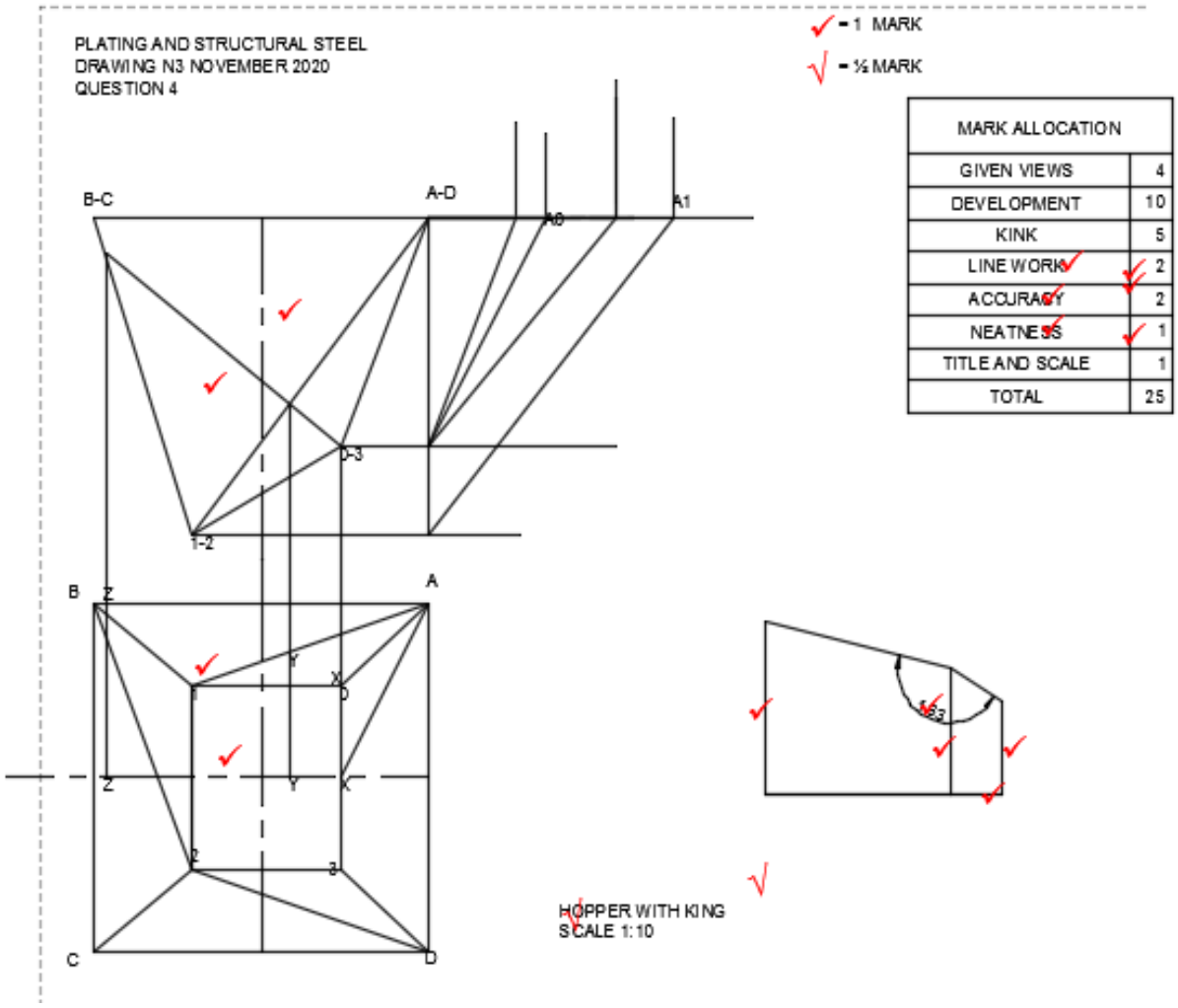

MARK ALLOCATION	
GIVEN VIEWS	4
DEVELOPMENT	10
KINK	5
LINE WORK	2
ACCURACY	2
NEATNESS	1
TITLE AND SCALE	1
TOTAL	25

PLATING AND STRUCTURAL STEEL
DRAWING N3 NOVEMBER 2020
QUESTION 4

✓ = 1 MARK
√ = ½ MARK

MARK ALLOCATION	
GIVEN VIEWS	4
DEVELOPMENT	10
KINK	5
LINE WORK	2
ACCURACY	2
NEATNESS	1
TITLE AND SCALE	1
TOTAL	25

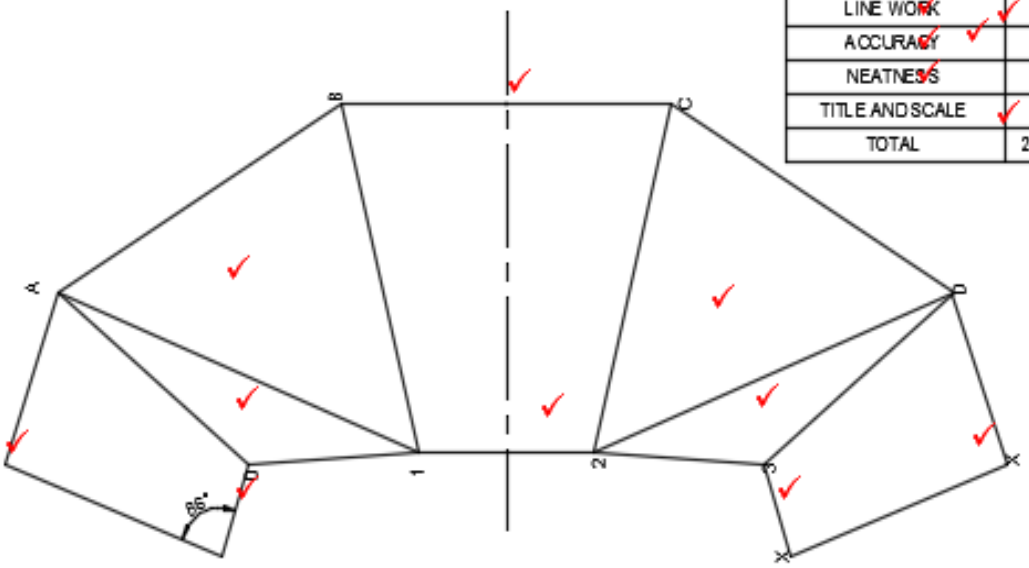

HOPPER WITH KING
SCALE 1:10

[25]

VRAAG 5

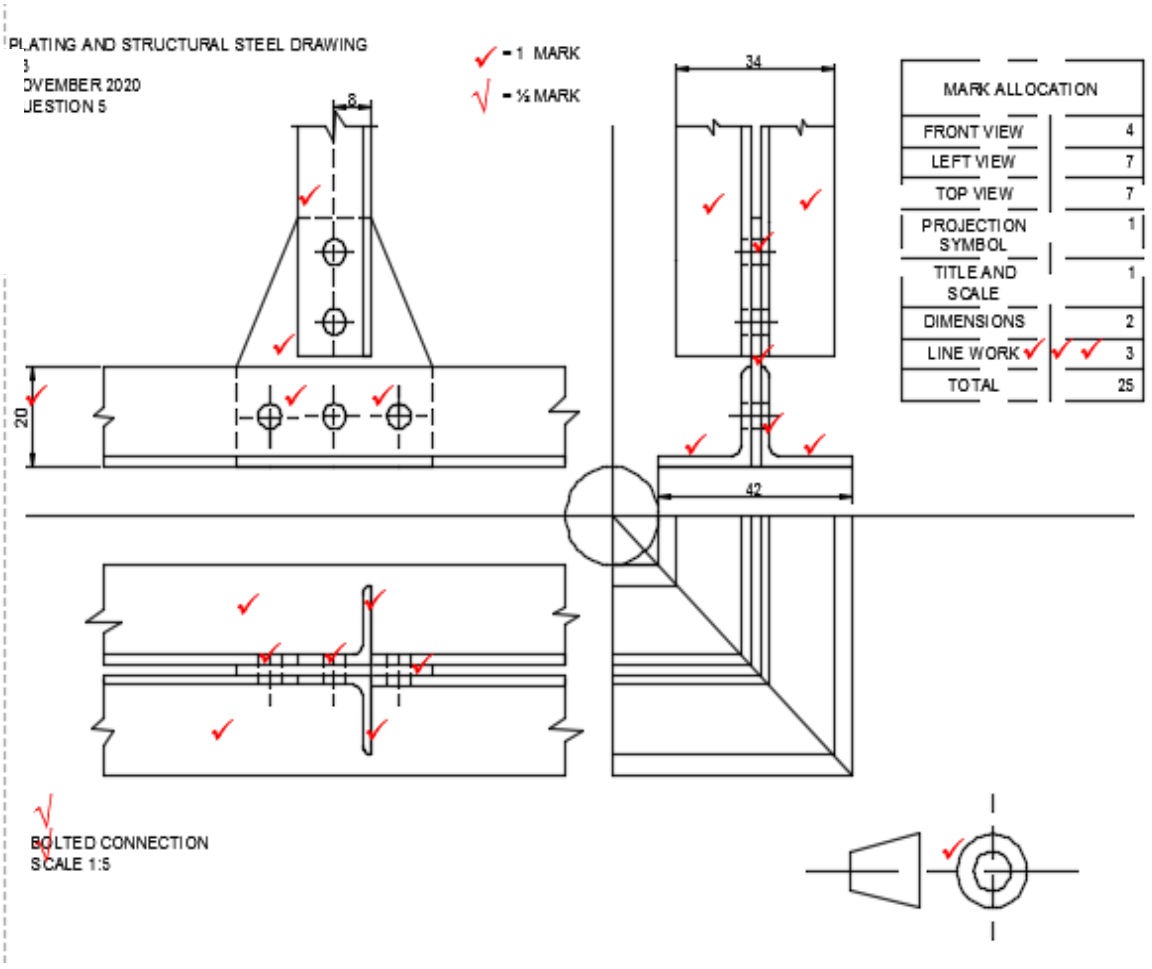

[25]

TOTAAL: 100

Kopiereg voorbehou