higher education & training

Department:
Higher Education and Training
REPUBLIC OF SOUTH AFRICA

NASIENRIGLYN

NASIONALE SERTIFIKAAT

PLAATWERK EN BOUSTAALTEKENE N3

25 JULIE 2018

Hierdie nasienriglyn bestaan uit 7 bladsye.

LET WEL: DIE NASIENRIGLYN IS NIE VOLGENS SKAAL GETEKEN NIE EN KAN NIE AS 'N NASIENMEESTER GEBRUIK WORD NIE.

Kopiereg voorbehou

VRAAG 1

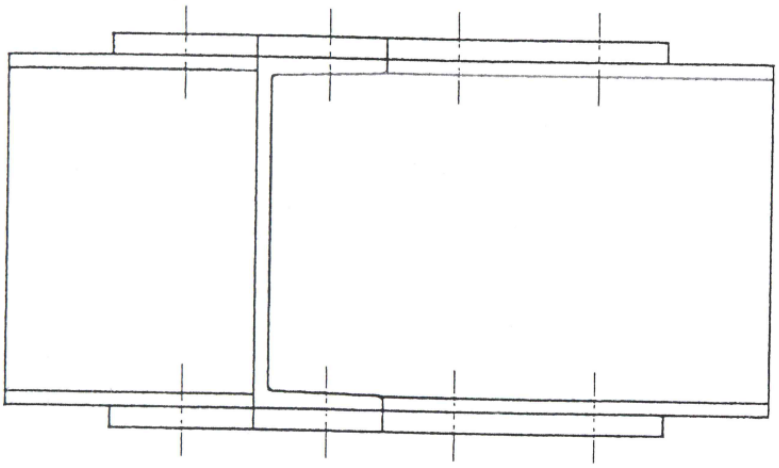

FRONT VIEW	4
LEFT VIEW	6
TOP VIEW	6
LINEWORK	3
ACCURACY AND NEATNESS	2
DIMENSIONS	2
PROJECTION SYMBOL	1
TITLE AND SCALE	1
TOTAL	**25**

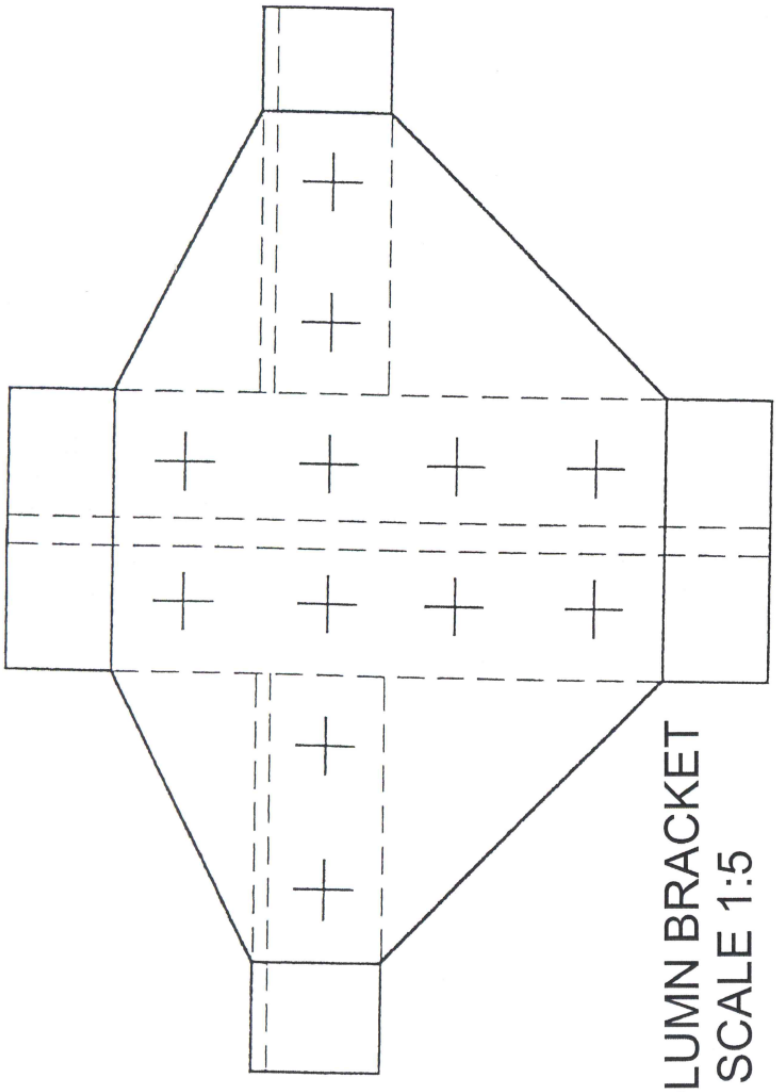

COLUMN BRACKET
SCALE 1:5

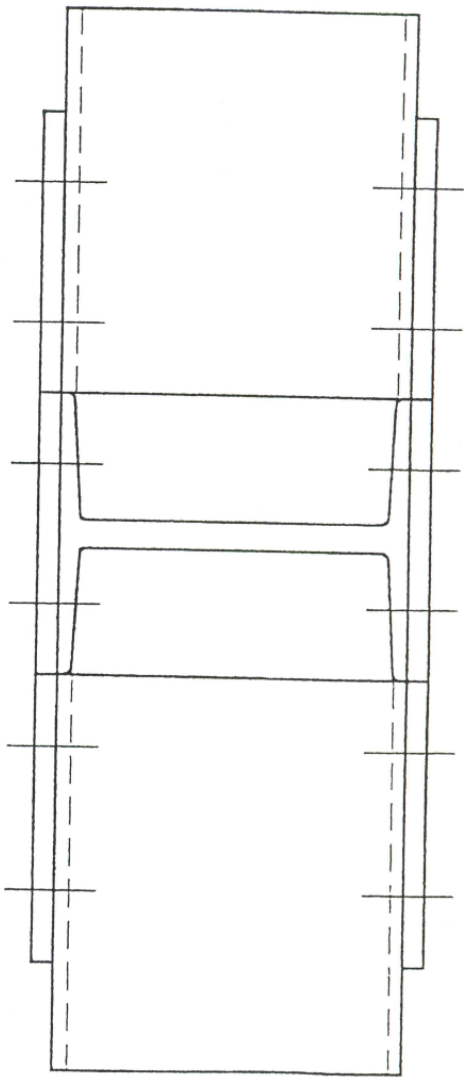

[25]

VRAAG 2

2.2

$x=R\sin 30^0=30\times 0,5=15mm$ $y=R\cos 30^0=30\times 0,866=5,98mm$

$b\text{-}0=\sqrt{15^2+5,98^2}=16,148mm$ $\therefore$ True Length of

$b\text{-}0=\sqrt{16,148^2+70^2}=72.11mm$ Or $b\text{-}0=\sqrt{\left(0,866R\text{-}r\right)^2+\left(0,5R\right)^2+h^2}$

$b\text{-}0=\sqrt{\left(0,866\times 30\text{-}20\right)^2+\left(0,5\times 30\right)^2+70^2}$ $b\text{-}0=72.11mm$

$a\text{-}0=\sqrt{10^2+70^2}=70,711mm$ Or $a\text{-}0=\sqrt{\left(R\text{-}r\right)^2+h^2}$

$a\text{-}0=\sqrt{\left(30\text{-}20\right)^2+70^2}=70,711mm$ Arc $a\text{-}b=\frac{\pi\times D}{12}=\frac{\pi\times 60}{12}=15,708mm$

Arc $0\text{-}1=\frac{\pi\times d}{12}=\frac{\pi\times 40}{12}=10,472mm$ (10)

VRAAG 2.1/2.3

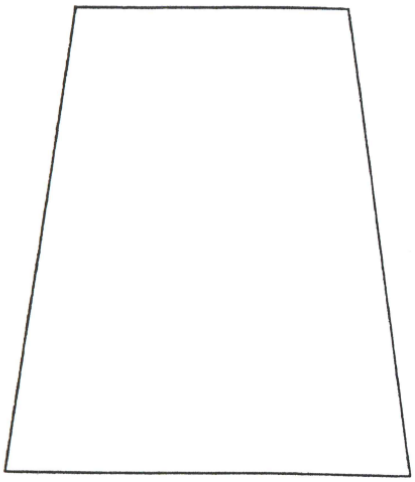

GIVEN VIEWS	2
CALCULATIONS	10
DEVELOPMENT	6
LINEWORK	2
ACCURACY	2
LAYOUT AND NEATNESS	2
TITLE AND SCALE	1
TOTAL	**25**

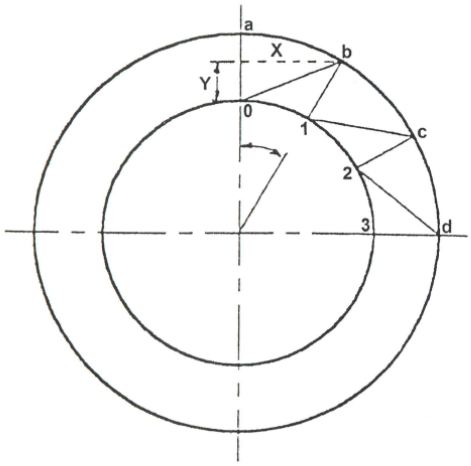

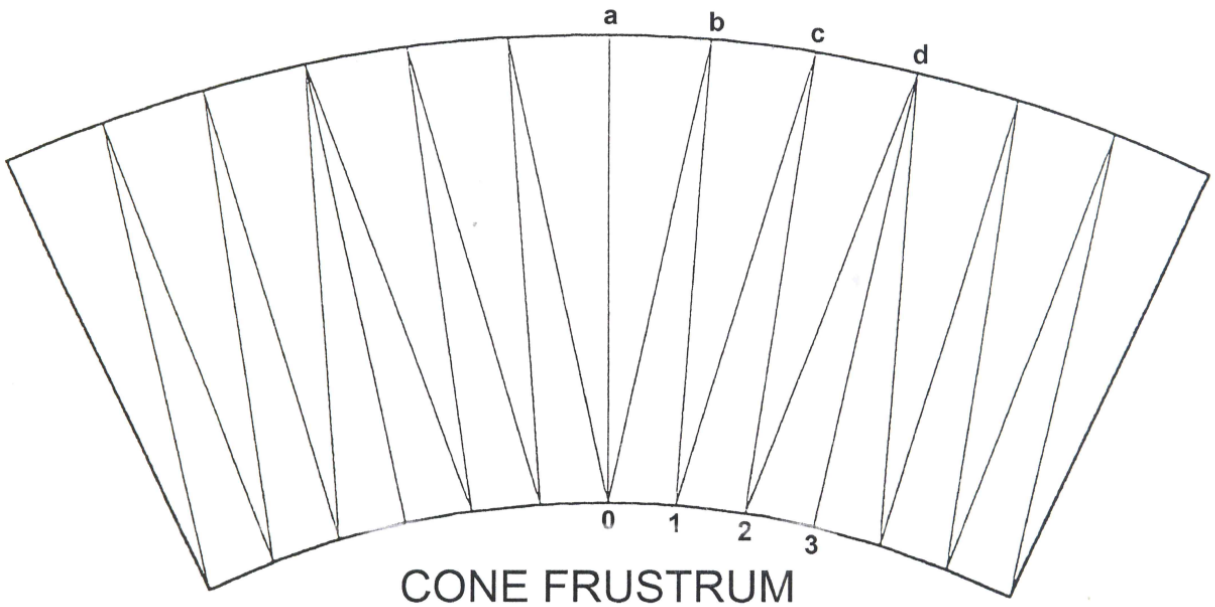

CONE FRUSTRUM
SCALE 1:1

VRAAG 3

QUESTION 3 MEMO

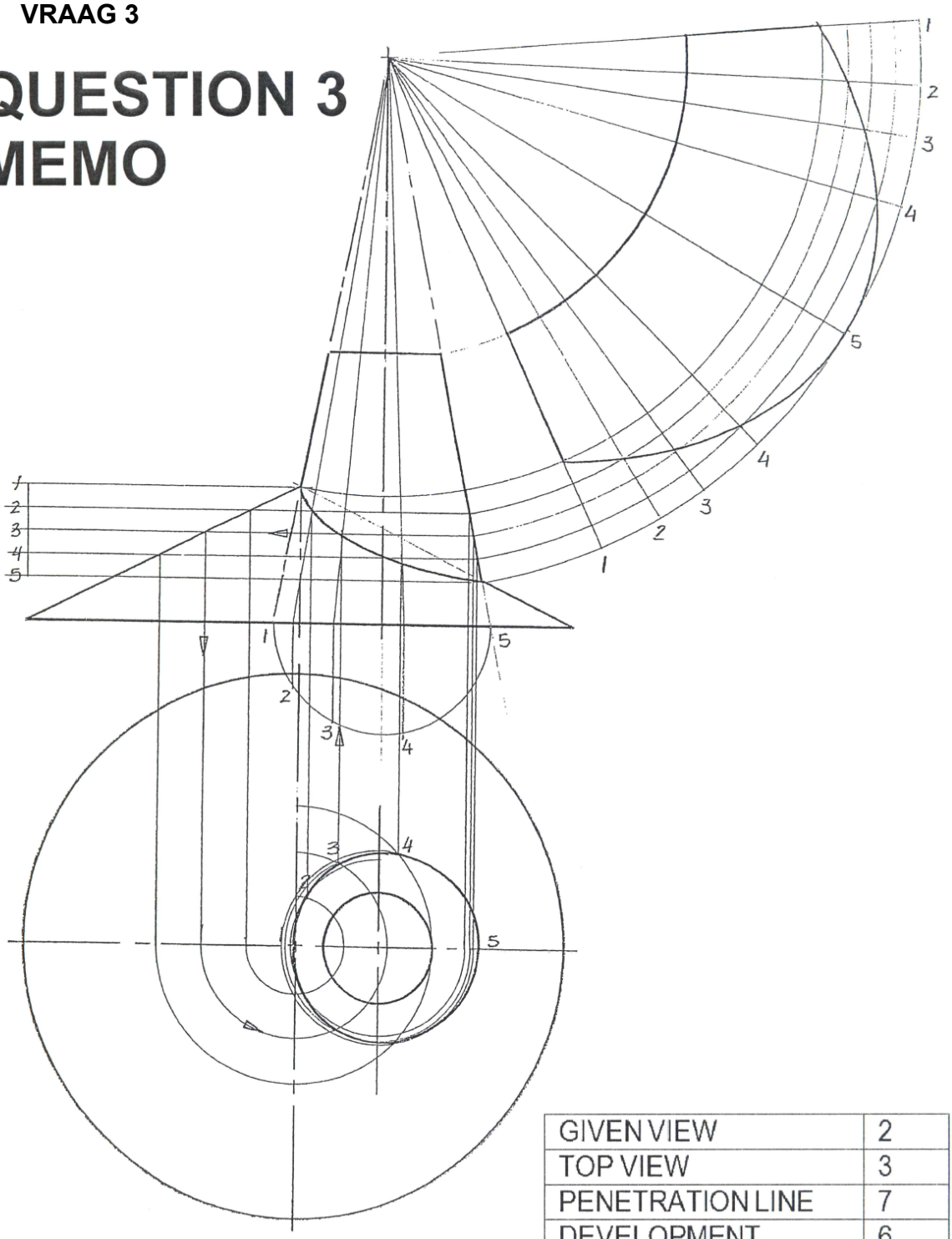

CONICAL COVER
SCALE 1:5

GIVEN VIEW	2
TOP VIEW	3
PENETRATION LINE	7
DEVELOPMENT	6
LINEWORK	2
ACCURACY	2
LAYOUT AND NEATNESS	2
TITLE AND SCALE	1
TOTAL	**25**

[25]

VRAAG 4

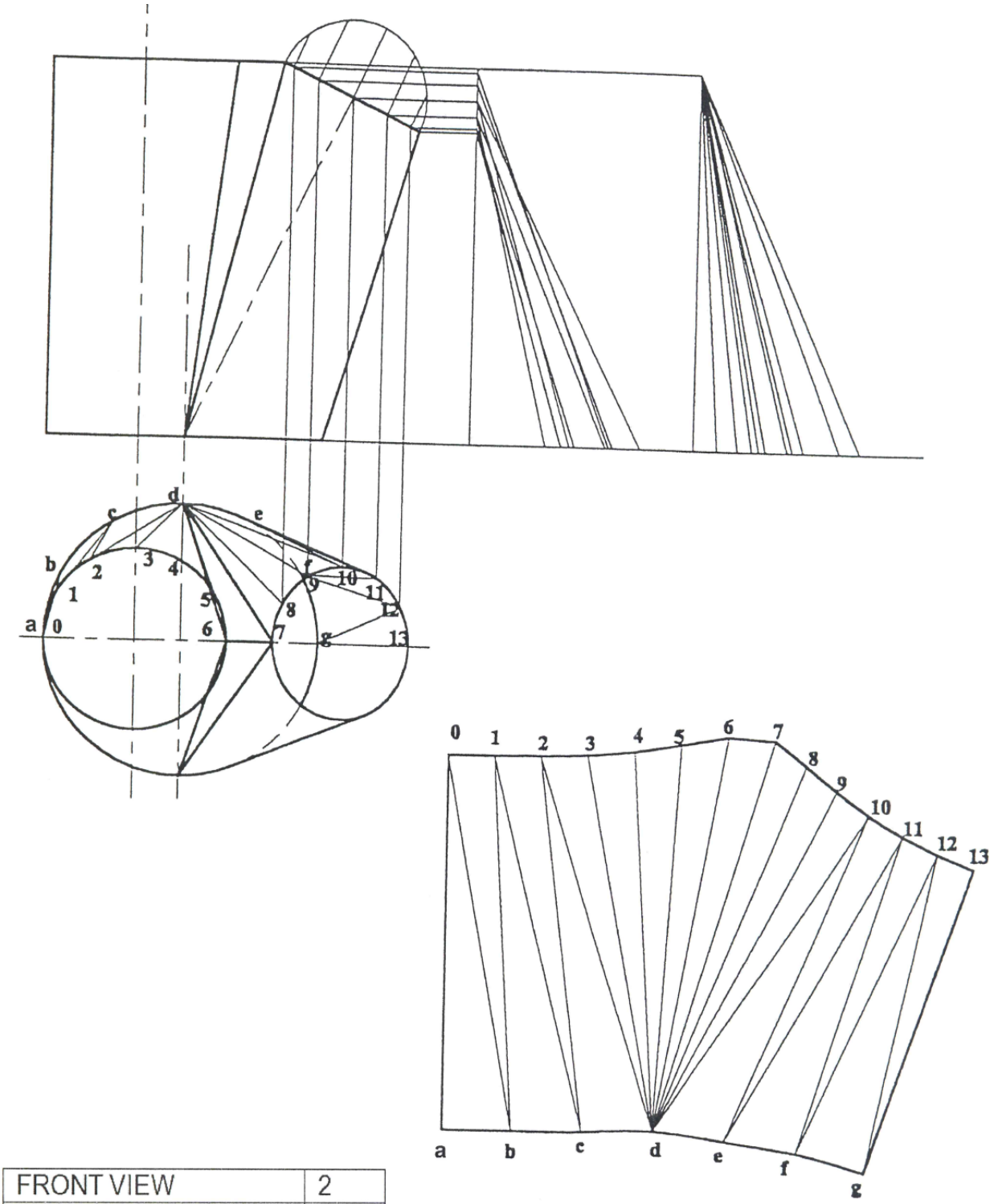

FRONT VIEW	2
TOP VIEW	3
DEVELOPMENT	13
LINEWORK	2
ACCURACY	2
LAYOUT AND NEATNESS	2
TITLE AND SCALE	1
TOTAL	**25**

STRAIGHT-BACK JUNCTION
SCALE 1:2

[25]

VRAAG 5

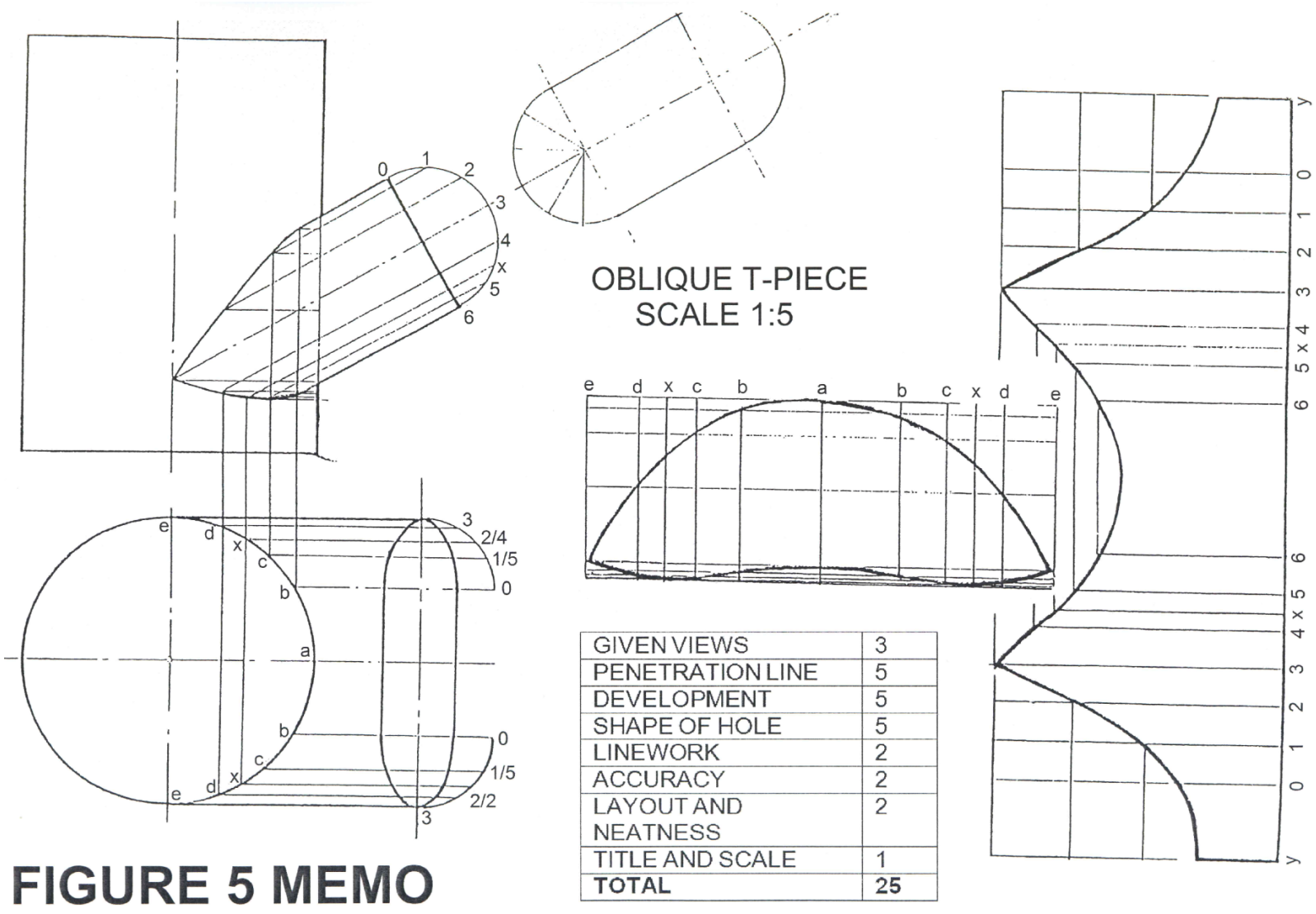

GIVEN VIEWS	3
PENETRATION LINE	5
DEVELOPMENT	5
SHAPE OF HOLE	5
LINEWORK	2
ACCURACY	2
LAYOUT AND NEATNESS	2
TITLE AND SCALE	1
TOTAL	**25**

FIGURE 5 MEMO

[25]
TOTAAL 100

Kopiereg voorbehou