higher education & training

Department:
Higher Education and Training
REPUBLIC OF SOUTH AFRICA

NASIENRIGLYN

NASIONALE SERTIFIKAAT

PLAATWERK- EN BOUSTAALTEKENE N3

6 April 2021

Hierdie nasienriglyn bestaan uit 6 bladsye.

Kopiereg voorbehou

VRAAG 1

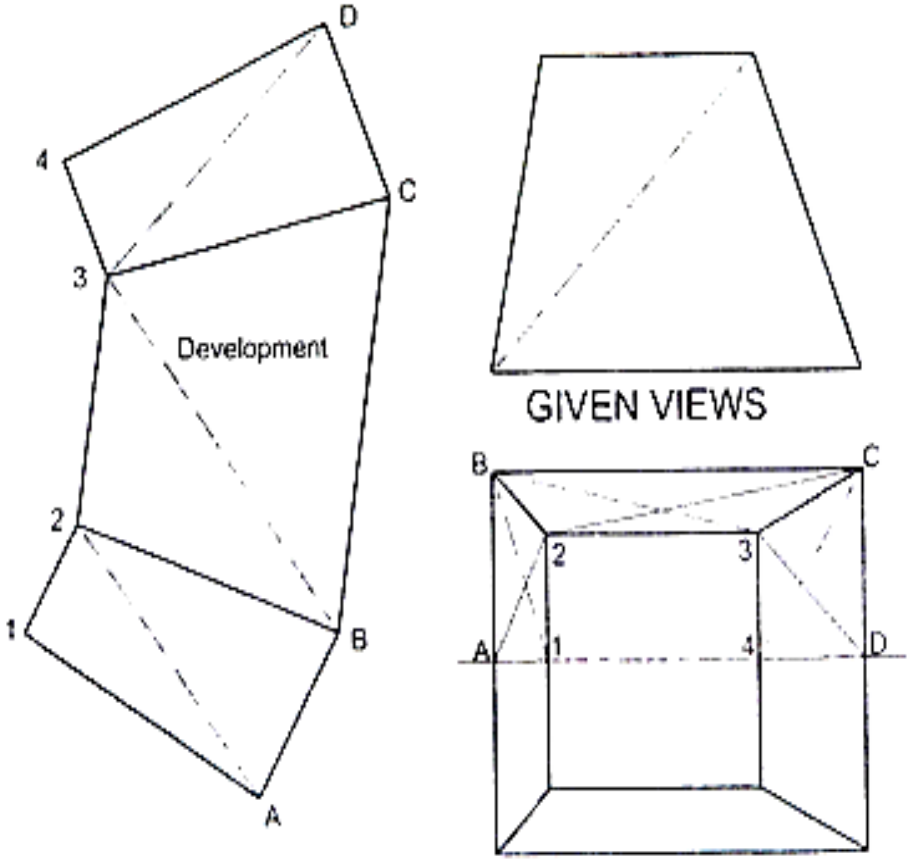

TRANSITION PIECE

SCALE 1 : 1

Calculations:

$1A = \sqrt{10^2 + 50^2} = 50{,}99 \rightarrow$ (1)

$1B = \sqrt{10^2 + 30^2 + 50^2} = 59{,}161 \rightarrow$ (2)

$2B = \sqrt{10^2 + 10^2 + 50^2} = 51{,}962 \rightarrow$ (2)

$3B = \sqrt{50^2 + 10^2 + 50^2} = 71{,}414 \rightarrow$ (2)

$3C = \sqrt{10^2 + 20^2 + 50^2} = 54{,}772 \rightarrow$ (2)

$4C = \sqrt{30^2 + 20^2 + 50^2} = 61{,}644 \rightarrow$ (2)

$4D = \sqrt{20^2 + 50^2} = 53{,}852 \rightarrow$ (1)

MARK ALLOCATION	
Given views	2
Calculations	12
Development	5
Line work and neatness	3
Accuracy	2
Title and scale	1
TOTAL:	25

VRAAG 2

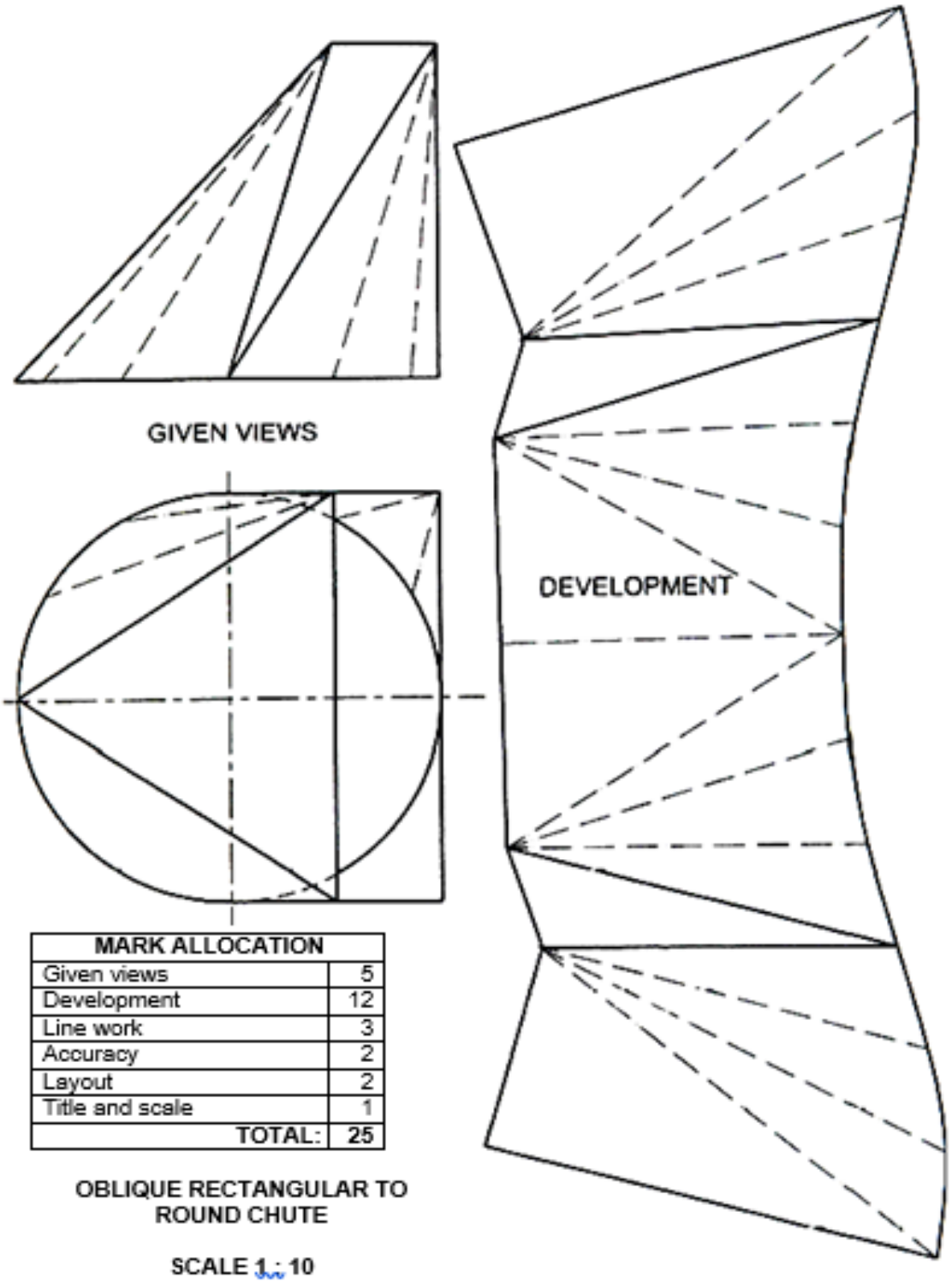

MARK ALLOCATION	
Given views	5
Development	12
Line work	3
Accuracy	2
Layout	2
Title and scale	1
TOTAL:	25

OBLIQUE RECTANGULAR TO ROUND CHUTE

SCALE 1 : 10

VRAAG 3

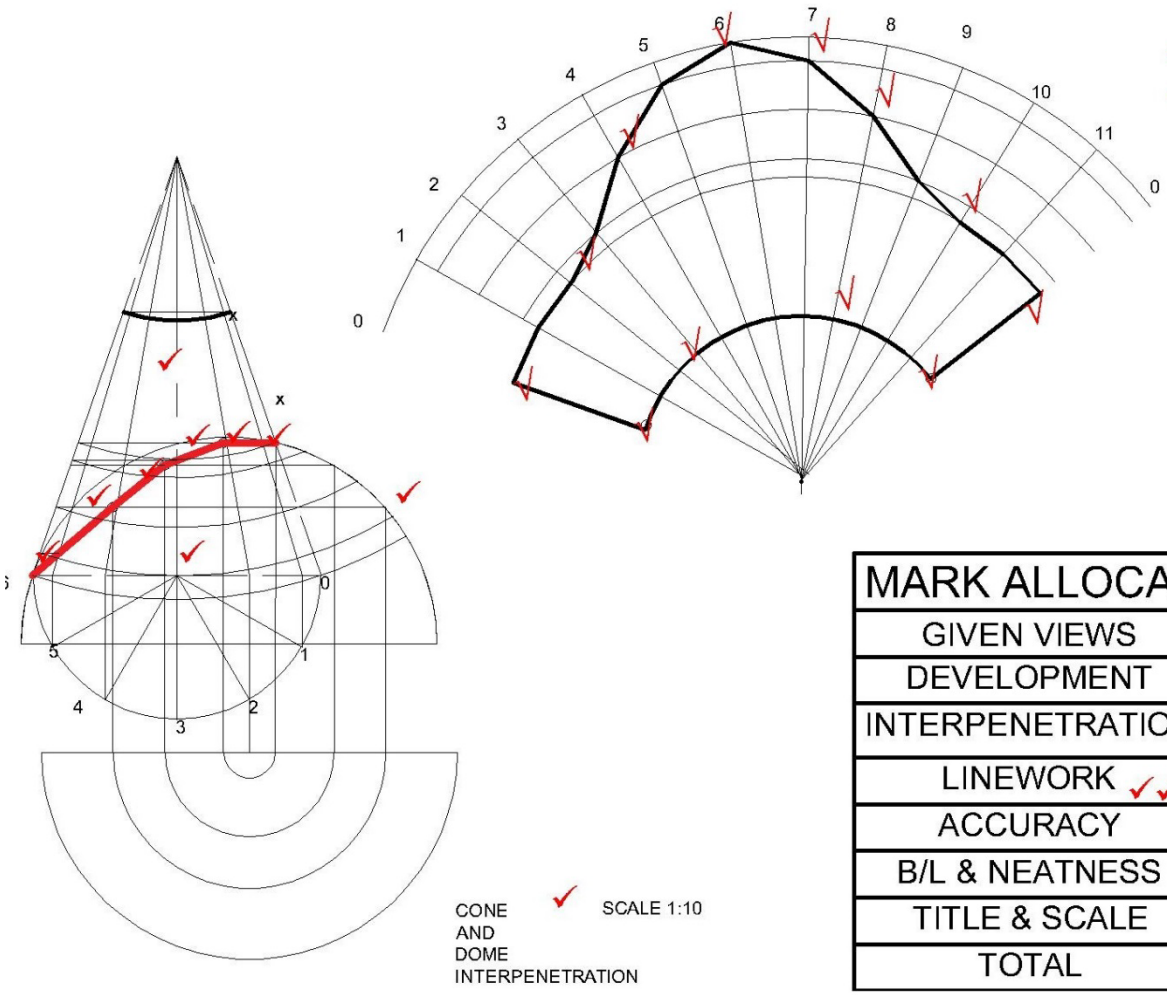

MARK ALLOCATION	
GIVEN VIEWS	3
DEVELOPMENT	6
INTERPENETRATION	6
LINEWORK	4
ACCURACY	3
B/L & NEATNESS	2
TITLE & SCALE	1
TOTAL	25

VRAAG 4

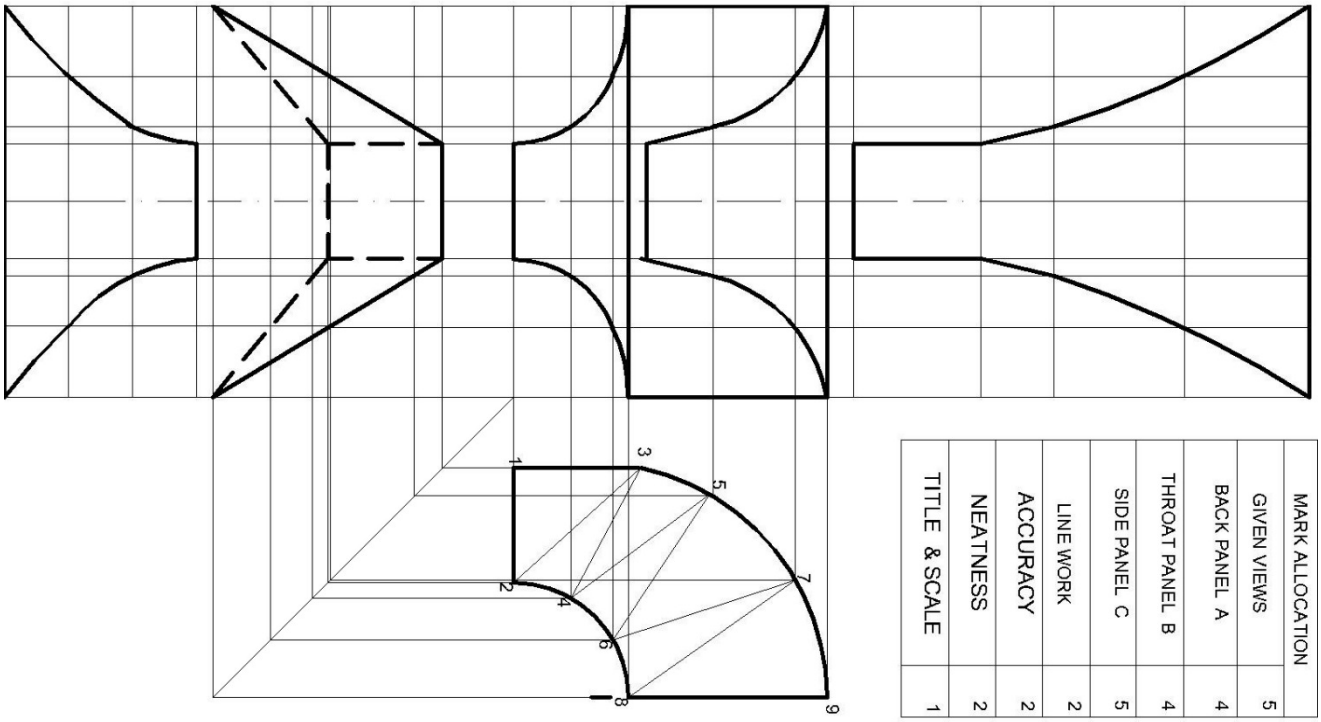

MARK ALLOCATION	
GIVEN VIEWS	5
BACK PANEL A	4
THROAT PANEL B	4
SIDE PANEL C	5
LINE WORK	2
ACCURACY	2
NEATNESS	2
TITLE & SCALE	1

25

VRAAG 5

MARK ALLOCATION	
Given views	3
Interpenetration	5
Development of branch pipe	5
Development of hole	5
Line work	2
Accuracy	2
Neatness and layout	2
Title and scale	1
TOTAL:	25

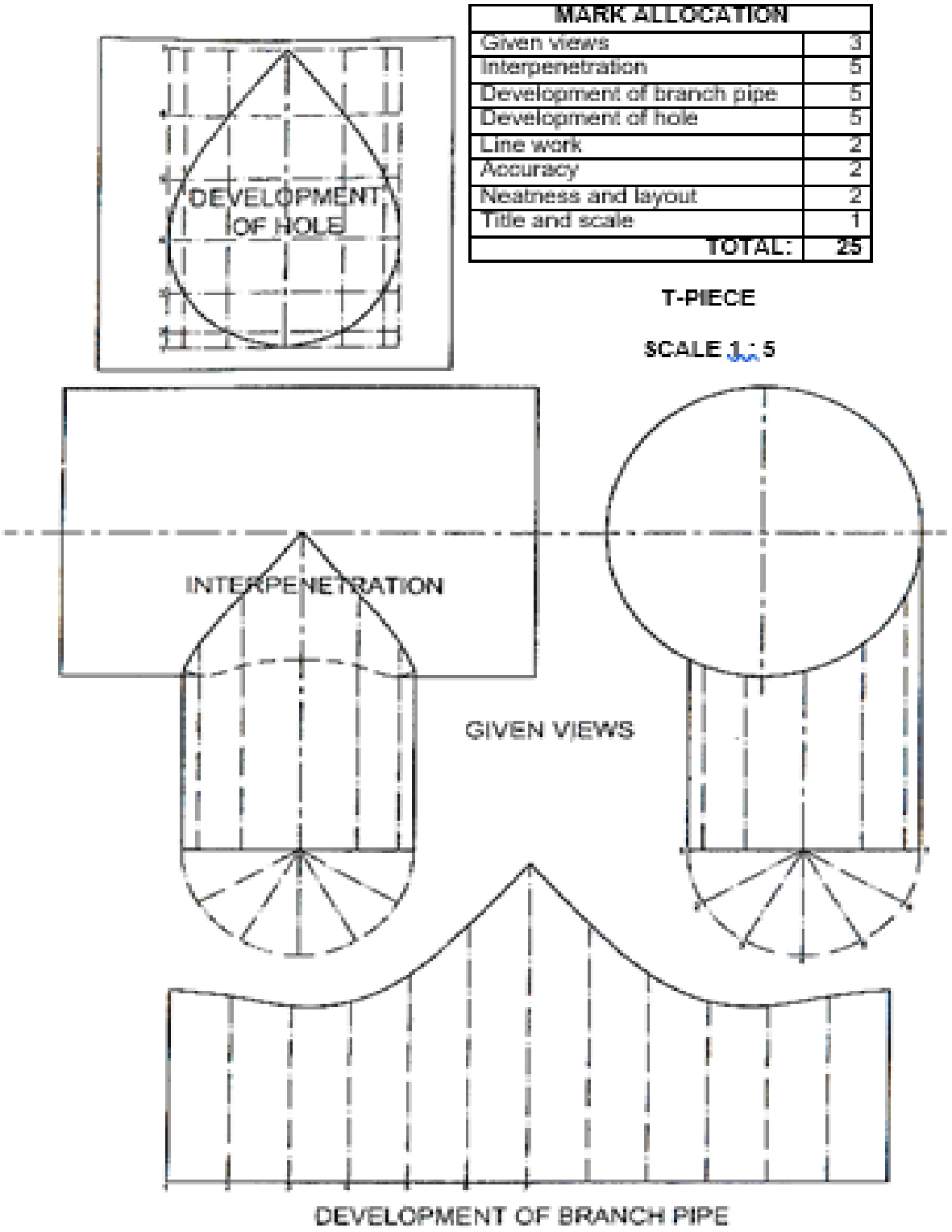

TOTAAL: 100

Kopiereg voorbehou