higher education & training

Department:
Higher Education and Training
REPUBLIC OF SOUTH AFRICA

NATIONAL CERTIFICATE

PLATING AND STRUCTURAL STEEL DRAWING N2

(8090102)

11 August 2021 (X-paper)
09:00–13:00

REQUIREMENTS: ONE A2 drawing sheet

Nonprogrammable calculators may be used.

This question paper consists of 5 pages and 3 diagram sheets.

264Q1G2111

Copyright reserved

DEPARTMENT OF HIGHER EDUCATION AND TRAINING
REPUBLIC OF SOUTH AFRICA

NATIONAL CERTIFICATE
PLATING AND STRUCTURAL STEEL DRAWING N2
TIME: 4 HOURS
MARKS: 100

NOTE: If you answer more than the required number of questions only the required number will be marked. Clearly cross out all work you do not want to be marked.

INSTRUCTIONS AND INFORMATION

1. Answer any FOUR questions.
2. Read all the questions carefully.
3. Number the answers according to the numbering system used in this question paper.
4. Show all construction lines.
5. Answer TWO questions on the front and TWO questions on the reverse side of the DRAWING SHEET.
6. Add dimensions to the answers.
7. Work neatly.

Copyright reserved

QUESTION 1

FIGURE 1, DIAGRAM SHEET 1 (attached), shows two views of a rectangular and semi-circular combination-to-round transition piece.

Draw, to scale 1:1, the following:

1.1 The front view. (1)

1.2 The top view. (2)

1.3 Develop the pattern of the plate for the transition piece using the true length from the true length diagram. (17)

Mark allocation for drawing office practice for the above question is as follows:

Dimensions (2)

Line work (3)

SCALE 1:1

[25]

QUESTION 2

FIGURE 2, DIAGRAM SHEET 2 (attached), shows an oblique down pipe with a right cylindrical connection.

Draw, to scale 1:5, the following:

2.1 The given view. (2)

2.2 Construct the line of penetration. (4)

2.3 Develop the oblique pipe and show the contour of the hole. (9)

2.4 Develop the pattern of the right cylindrical pipe. (5)

Mark allocation for drawing office practice for the above question is as follows:

Dimensions (2)

Line work (3)

SCALE 1:5

[25]

Copyright reserved

QUESTION 3

FIGURE 3, DIAGRAM SHEET 2 (attached), shows a conical hopper with three cylindrical branch pipes that are equal in diameter.

Draw, to scale 1:2 the following:

3.1 The given view (2)

3.2 The line of penetration. (6)

3.3 Develop the branch pipe marked A (6)

3.4 Develop the branch pipe marked B (6)

Mark allocation for drawing office practice for the above question is as follows:

Dimensions (2)

Line work (3)

SCALE 1:2

[25]

QUESTION 4

FIGURE 4, DIAGRAM SHEET 3 (attached), shows an off-centre oblique T-piece made of cylindrical pipes with different diameters.

Draw to scale 1:2, the following:

4.1 The front view. (1)

4.2 Draw and complete the left view. (3)

4.3 Determine by construction the line of penetration. (6)

4.4 Develop the pattern of the branch pipe marked “T” (5)

4.5 Develop the shape of the hole in the branch pipe marked “H” (5)

Mark allocation for drawing office practice for the above question is as follows:

Dimensions (2)

Line work (3)

SCALE 1:2

[25]

Copyright reserved

QUESTION 5

FIGURE 5, DIAGRAM SHEET 3 (attached), shows an isometric view of a bracket bolted to a stanchion.

Draw, to scale 1:5, the following in first-angle orthographic projection:

5.1 The front view in the direction of arrow A (6)

5.2 The left view in the direction of arrow B (6)

5.3 The top view in the direction of arrow C (6)

Mark allocation for drawing office practice for the above question is as follows:

Any two dimensions (2)

Line work (3)

Print the title “BRACKET OT STANCHION CONNECTION” (1)

Add the projection symbol. (1)

SCALE 1:5

[25]

TOTAL: 100

Copyright reserved

DIAGRAM SHEET 1

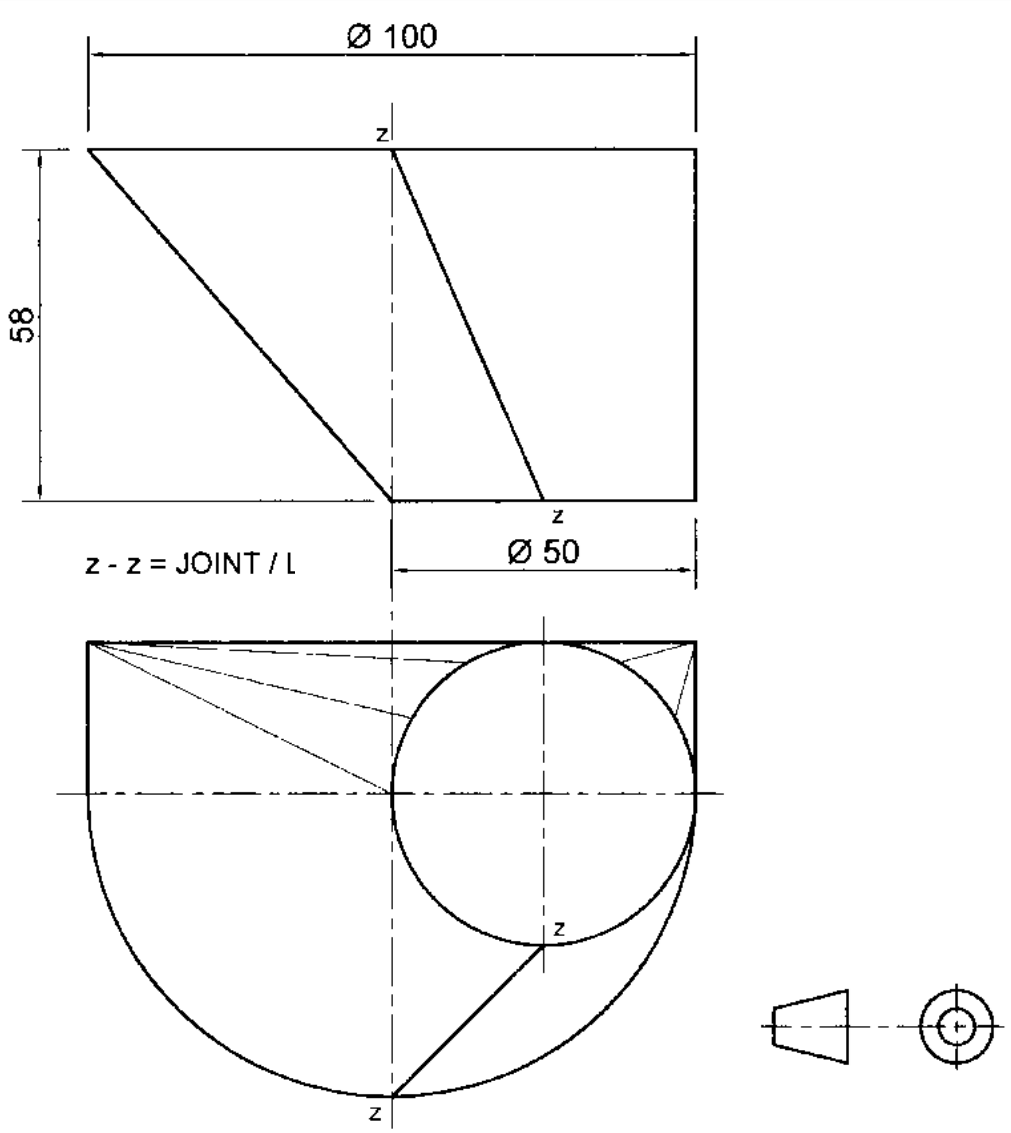

FIGURE 1

Copyright reserved

DIAGRAM SHEET 2

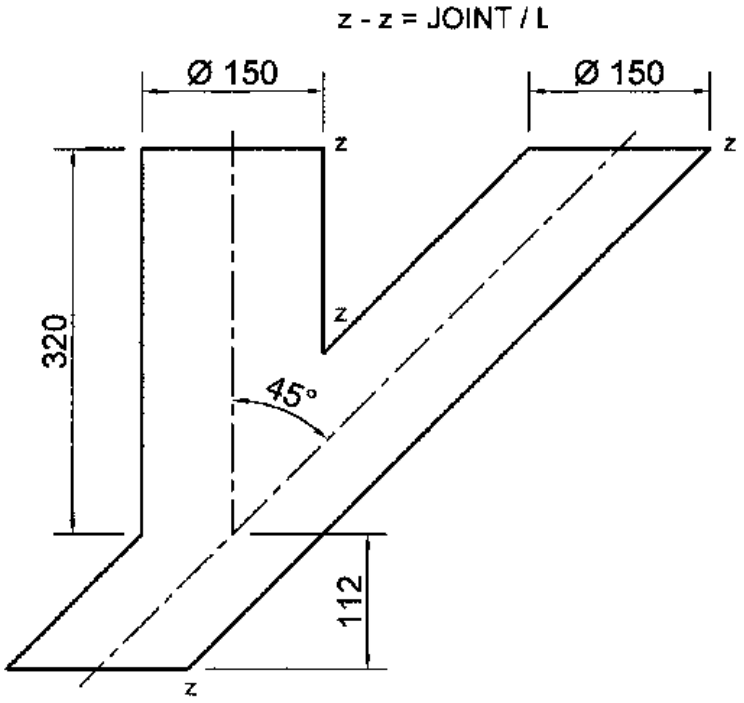

FIGURE 2

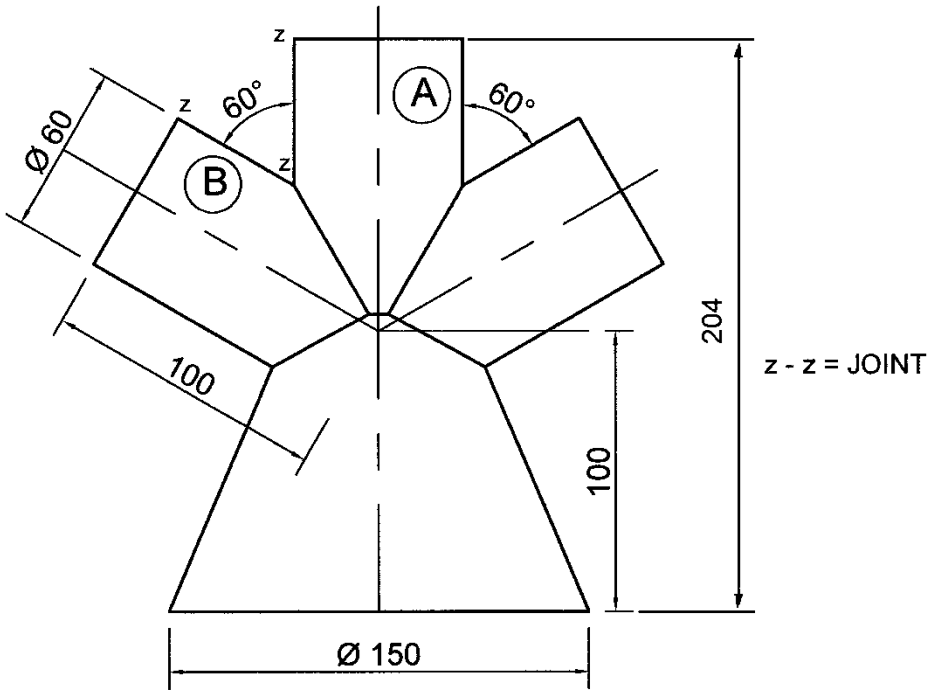

FIGURE 3

Copyright reserved

DIAGRAM SHEET 3

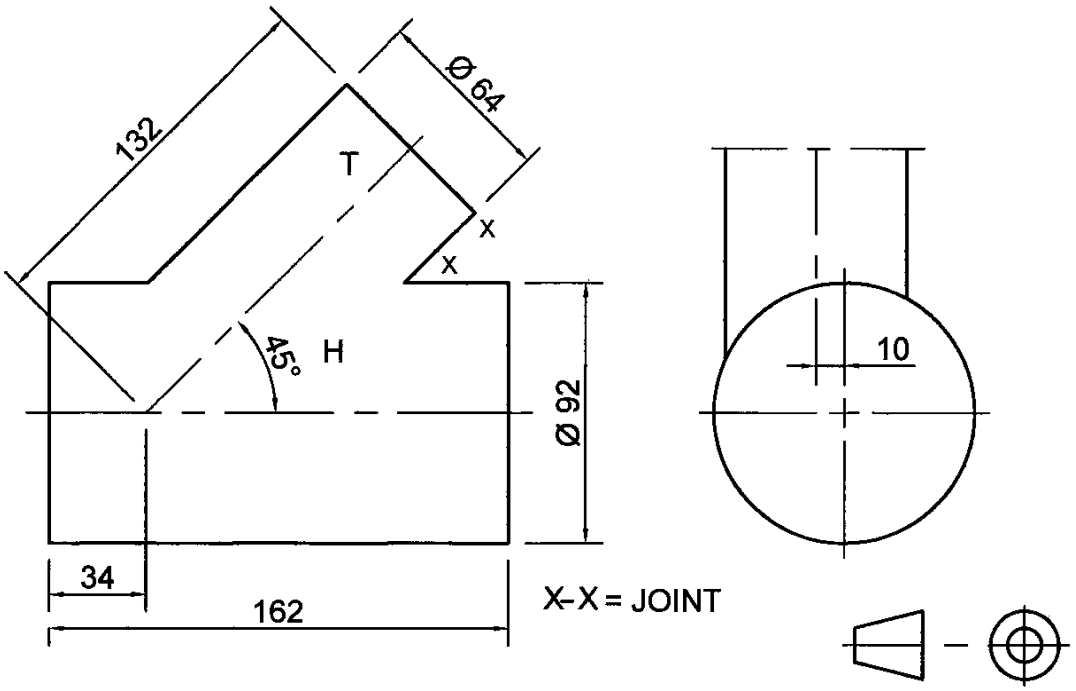

FIGURE 4

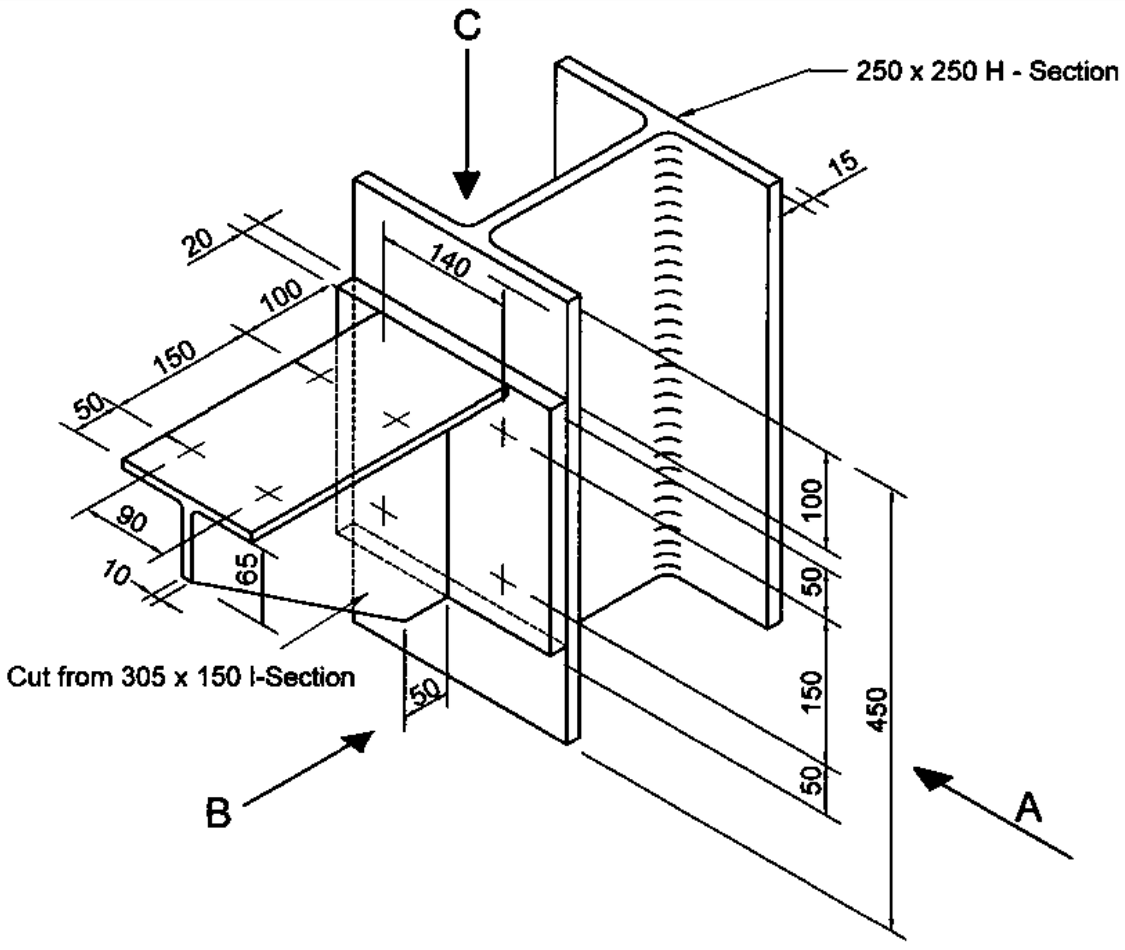

FIGURE 5

Copyright reserved