higher education & training

Department:
Higher Education and Training
REPUBLIC OF SOUTH AFRICA

T1340**(E)**(A8)T

NATIONAL CERTIFICATE

PLATING AND STRUCTURAL STEEL DRAWING N2

(8090102)

8 August 2019 (X-Paper)
09:00–13:00

REQUIREMENTS: ONE A2 drawing sheet

Calculators may be used.

This question paper consists of 7 pages

Copyright reserved

DEPARTMENT OF HIGHER EDUCATION AND TRAINING
REPUBLIC OF SOUTH AFRICA

NATIONAL CERTIFICATE
PLATING AND STRUCTURAL STEEL DRAWING N2
TIME: 4 HOURS
MARKS: 100

NOTE: If you answer more than the required number of questions only the required number will be marked. Clearly cross out ALL work you do NOT want to be marked.

INSTRUCTIONS AND INFORMATION

1. Answer ALL the questions in SECTION A.
2. Answer any THREE questions in SECTION B.
3. Read ALL the questions carefully.
4. Number the answers according to the numbering system used in this question paper.
5. Show ALL construction lines.
6. Do TWO questions on the front and TWO questions on the reverse side of the DRAWING SHEET.
7. Add dimensions to the answers.
8. Work neatly.

Copyright reserved

SECTION A

QUESTION 1

FIGURE 1, below, shows a welded base of a column.

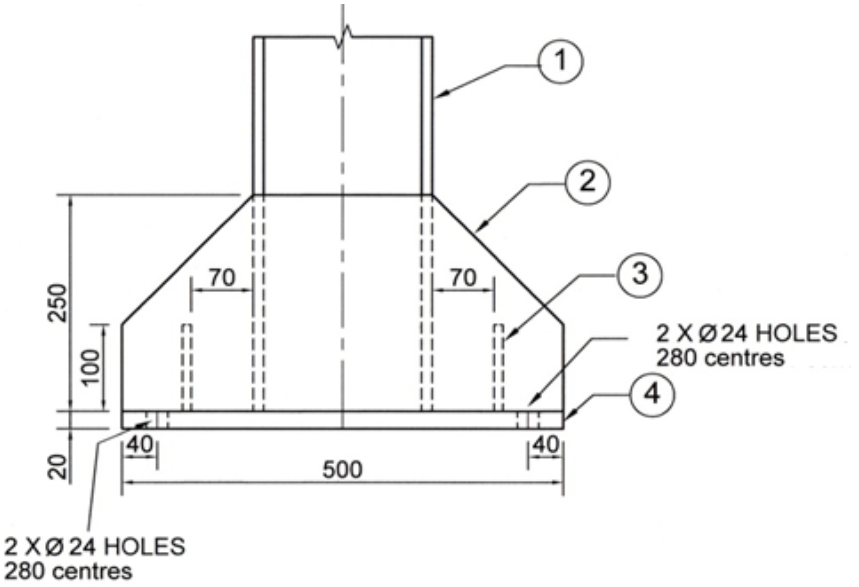

FIGURE ONE

1. Draw, to scale 1:5, the following views in first-angle orthographic projection

   1.1 The given front view (3)

   1.2 The top view (6)

   1.3 The left view (7)

Mark allocation for drawing office practice for the above question is as follows:

Title and Scale - Print the title WELDED BASE COLUMN and scale. (2)

Dimensions (2)

Line work (3)

Projection symbol (2)

[25]

Material List:

Item 1	203 × 203 H-section (parallel flange) (The flanges and the web are 10 mm thick.)	1 off
Item 2	10 mm thick plate – 250 × 500	2 off
Item 3	10 mm thick plate – 100 × 203	2 off
Item 4	20 mm thick plate – 360 × 500	1 off

TOTAL SECTION A: 25

Copyright reserved

SECTION B

QUESTION 2

FIGURE 2, below, shows TWO views of a twisted transition piece.

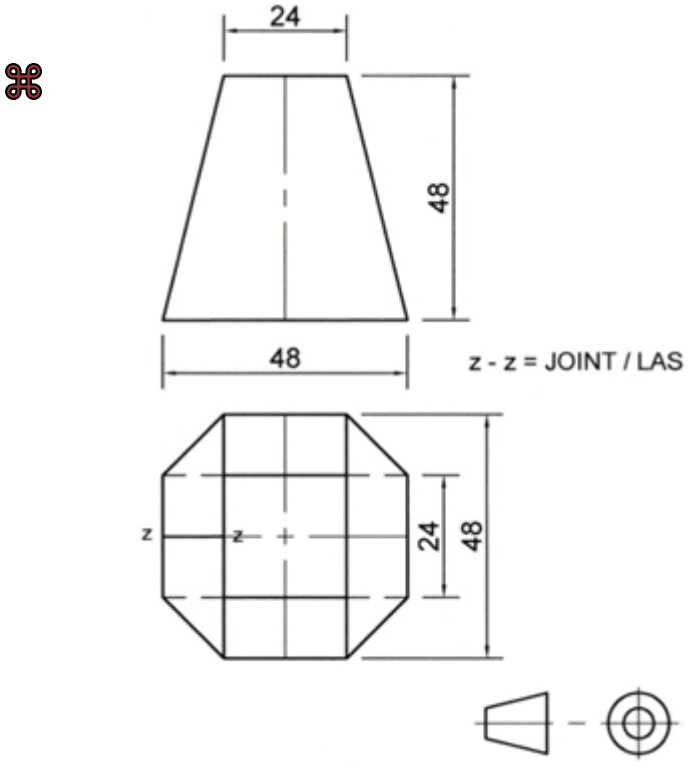

FIGURE TWO

2. Draw, to scale 1:1, the following:

2.1 The front view (1)

2.2 The top view (2)

2.3 The pattern of the plate for the transition piece (17)

Mark allocation for drawing office practice for the above question is as follows:

Dimensions (2)

Line work (3)

[25]

Copyright reserved

QUESTION 3

FIGURE 3, below shows a front view of a conical hood.

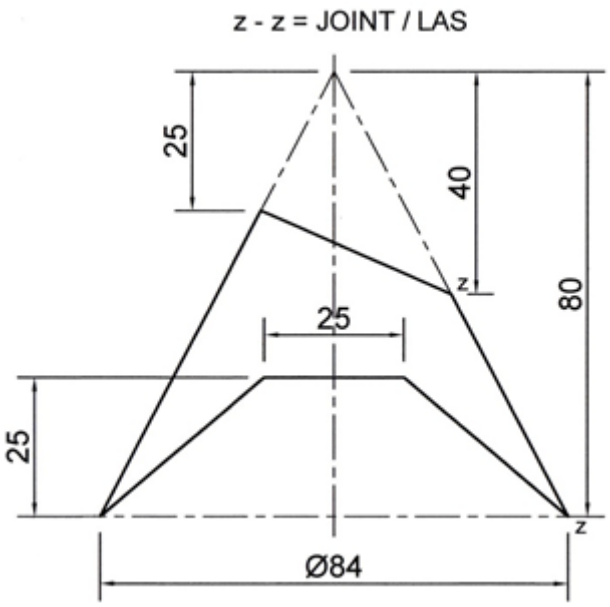

FIGURE 3

3 Draw, to scale 1:1 the following: -

3.1	The given front view	(1)
3.2	The top view	(7)
3.3	The pattern to develop the hood	(12)

Mark allocation for drawing office practice for the above question is as follows:

Dimensions	(2)
Line work	(3)

[25]

QUESTION 4

FIGURE 4, below, shows a common central sphere connection.

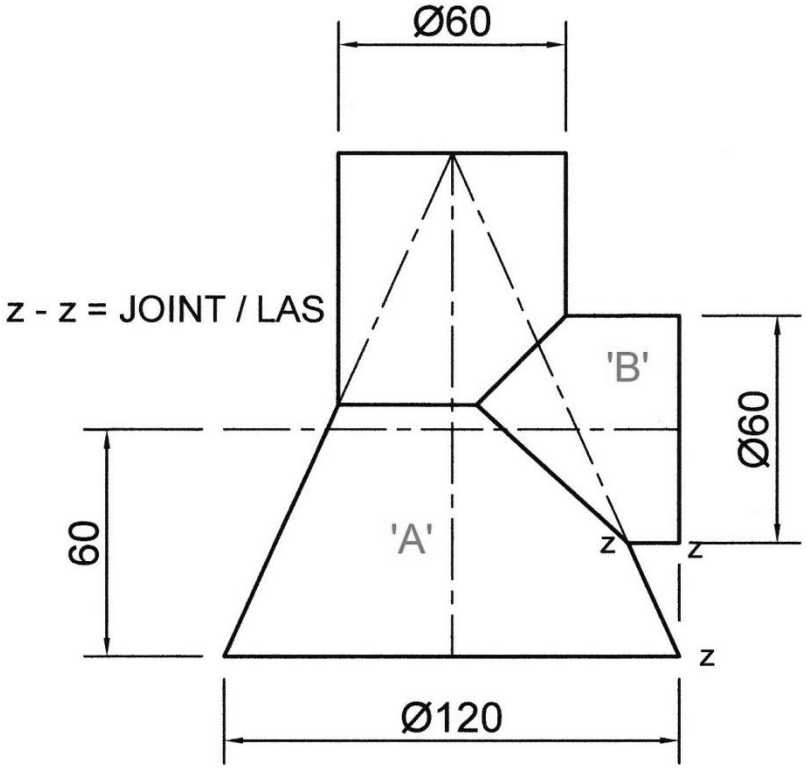

FIGURE 4

:

4. Draw, to scale 1:2 the following: -

4.1	The given front view	(2)
4.2	The line of penetration.	(4)
4.3	The development of the pattern of the cone “A”.	(6)
4.4	The development of the pattern of the pipe “B”	(8)

Mark allocation for drawing office practice for the above question is as follows:

Dimensions (2)

Line work (3)

[25]

QUESTION 5

FIGURE 5, below shows a junction between a hexagonal pipe and a round pipe.

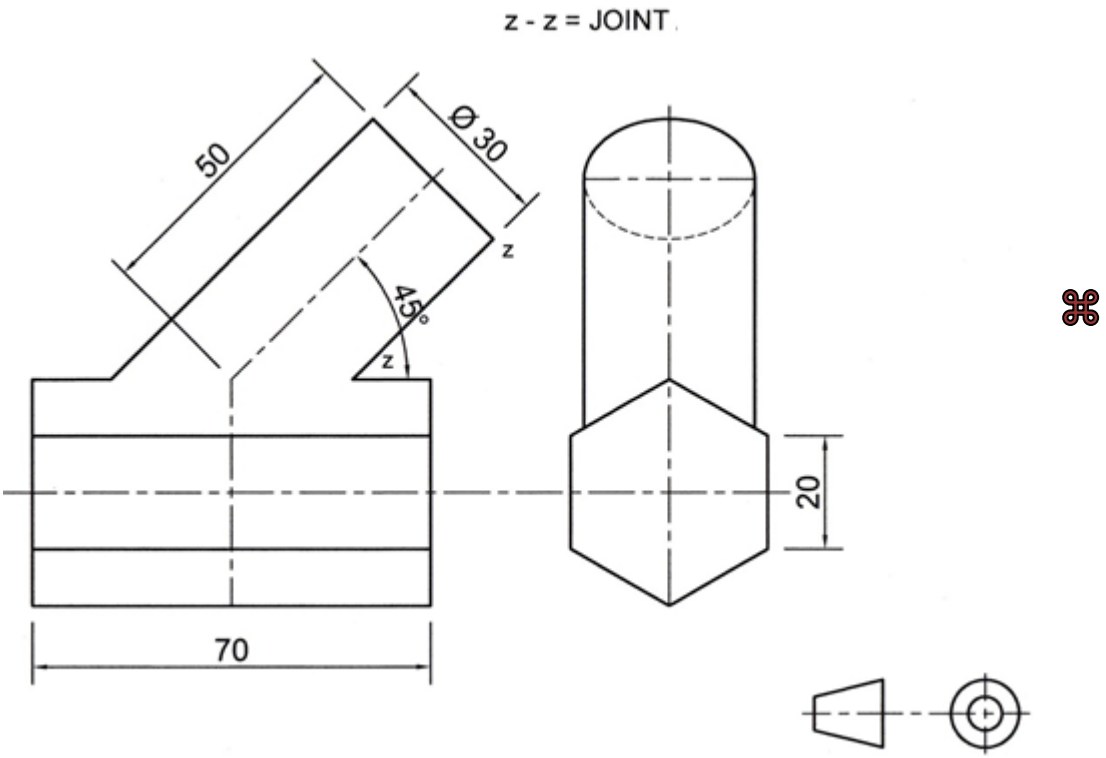

FIGURE FIVE

5 Draw, to scale 1:1 the following: -

5.1	The front view	(1)
5.2	The left view	(2)
5.3	The line of penetration.	(5)
5.4	The development of the pattern of the round pipe.	(6)
5.5	The shape of the hole in the hexagonal pipe	(6)

Mark allocation for drawing office practice for the above question is as follows:

Dimensions (2)

Line work (3)

[25]

TOTAL SECTION B: 75
GRAND TOTAL: 100