higher education & training

Department:
Higher Education and Training
REPUBLIC OF SOUTH AFRICA

T1340**(E)**(A3)T

NATIONAL CERTIFICATE

PLATING AND STRUCTURAL STEEL DRAWING N2

(8090102)

3 August 2018 (X-Paper)
09:00–13:00

REQUIREMENTS: ONE A2 drawing sheet

Calculators may be used.

This question paper consists of 4 pages and 3 diagram sheets.

Copyright reserved

DEPARTMENT OF HIGHER EDUCATION AND TRAINING
REPUBLIC OF SOUTH AFRICA

NATIONAL CERTIFICATE
PLATING AND STRUCTURAL STEEL DRAWING N2
TIME: 4 HOURS
MARKS: 100

NOTE: If you answer more than the required number of questions only the required number will be marked. ALL work you do not want to be marked must be clearly crossed out.

INSTRUCTIONS AND INFORMATION

1. Answer ALL the questions in SECTION A.
2. Answer any TWO questions in SECTION B.
3. Read ALL the questions carefully.
4. Number the answers according to the numbering system used in this question paper.
5. Show ALL construction lines.
6. Answer TWO questions on the front and TWO questions on the reverse side of the DRAWING SHEET.
7. Add dimensions to the answers.
8. Write neatly and legibly.

Copyright reserved

SECTION A

QUESTION 1

FIGURE 1, DIAGRAM SHEET 1 (attached), shows two views of an intersection between a cone and a hexagonal pipe.

Draw, to scale 1 : 1:

1.1 The given views (3)

1.2 The line of penetration (6)

1.3 The pattern for the hexagonal pipe (6)

1.4 The shape of the hole in the cone (5)

Mark allocation for drawing office practice for the above question is as follows:

Dimensions (2)

Line work (3)

[25]

QUESTION 2

FIGURE 2, DIAGRAM SHEET 1 (attached), shows two views of an oblique T-piece made of a cylindrical pipe and a rectangular branch pipe.

Draw, to scale 1 : 5

2.1 The TWO views. (4)

2.2 The development of the pattern for the rectangular branch pipe A (8)

2.3 The shape of the hole in the cylindrical pipe B (8)

Mark allocation for drawing office practice for the above question is as follows:

Dimensions (2)

Line work (3)

[25]

TOTAL SECTION A: 50

Copyright reserved

SECTION B

QUESTION 3

FIGURE 3, DIAGRAM SHEET 2 (attached), shows two views of a twisted rectangular-to-rectangular transformer.

Draw, to scale 1 : 10.

3.1 The TWO views. (2)

3.2 The development of the pattern of the plate for the transformer. (18)

Mark allocation for drawing office practice for the above question is as follows:

Dimensions (2)

Line work (3)

[25]

QUESTION 4

FIGURE 4, DIAGRAM SHEET 3 (attached), shows a T-piece that is reinforced with a gusset piece.

Draw, to scale 1 : 2.

NOTE THAT THE DIMENSIONS ARE MISSING AND ARE WRONGLY PLACED ON THE DIAGRAM SHEET AND MUST BE EDITED ACCORDINGLY.

4.1 The given view. (2)

4.2 The penetration line. (4)

4.3 The development of the pattern of the gusset piece G. (8)

4.4 The development of the pattern of the cylindrical pipe A. (6)

Mark allocation for drawing office practice for the above question is as follows:

Dimensions (2)

Line work (3)

[25]

Copyright reserved

QUESTION 5

FIGURE 5, DIAGRAM SHEET 3 (attached), shows an oblique connection between a cylindrical pipe and a right cone that is placed around a common central sphere.

Draw, to scale 1:1. , the given view and determine the line of penetration.

5.1 The given view. (2)

5.2 The penetration line. (4)

5.3 The development of the pattern of the right cone. (8)

5.4 The development of the pattern of the cylindrical pipe. (6)

Mark allocation for drawing office practice for the above question is as follows:

Dimensions (2)

Line work (3)

[25]

TOTAL SECTION B: 50
GRAND TOTAL: 100

Copyright reserved

DIAGRAM SHEET 1

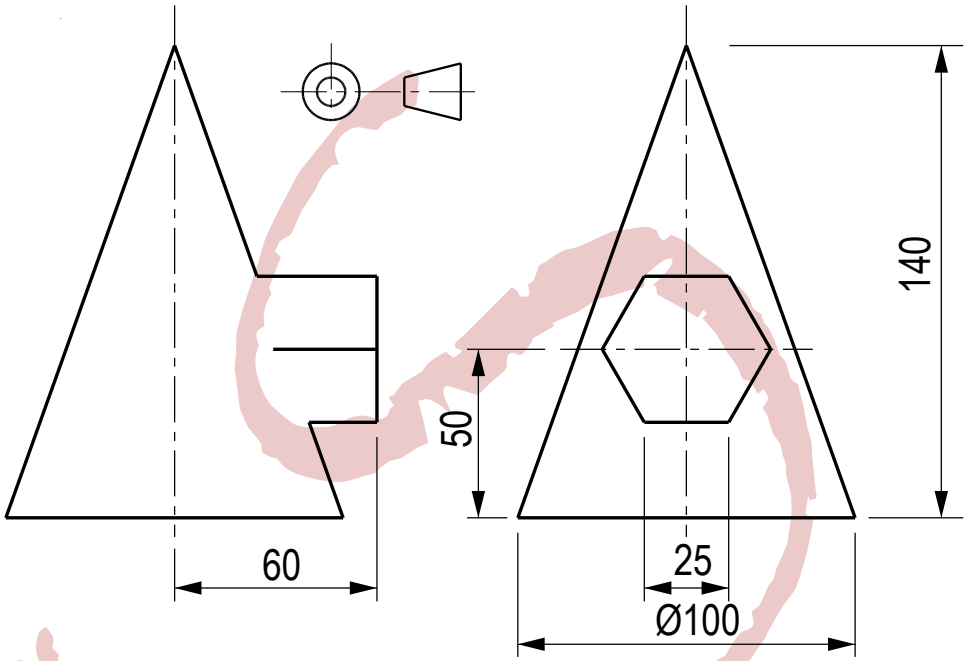

FIGURE 1

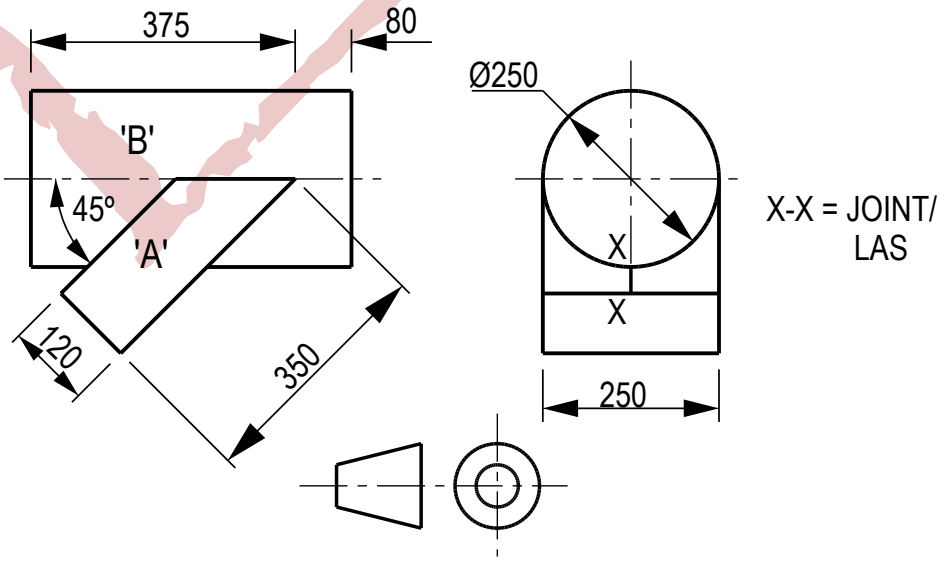

FIGURE 2

Copyright reserved

DIAGRAM SHEET 2

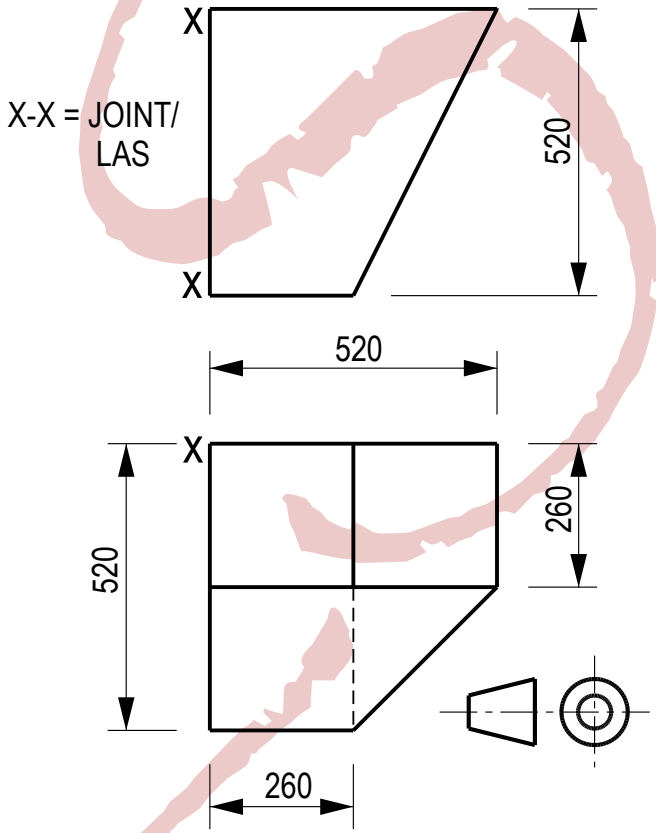

FIGURE 3

Copyright reserved

DIAGRAM SHEET 3

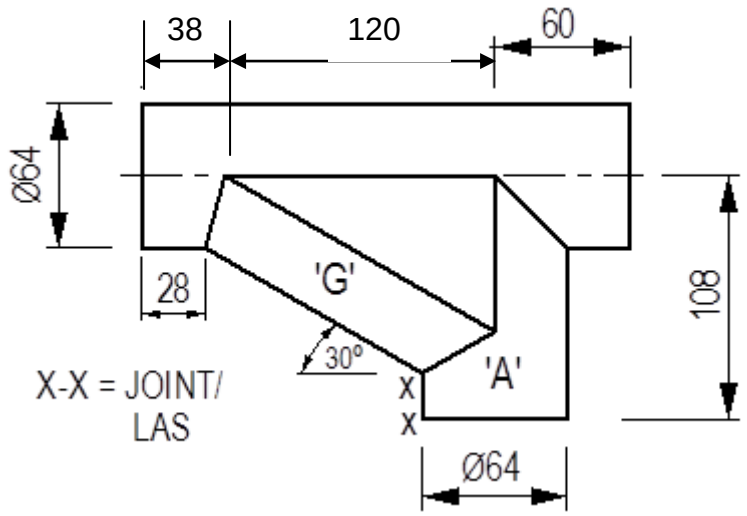

PLAEASE NOTE THAT THE DIMENSIONS ON THE DIAGRAM SHEET ARE WRONG AND MUST BE PRINTED ACCORDING TO CHANGES.

FIGURE 4

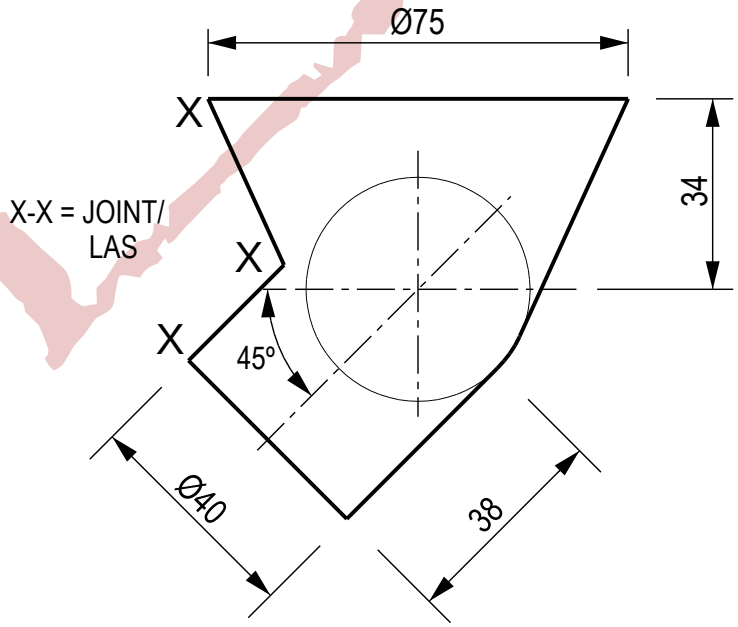

FIGURE 5

Copyright reserved