higher education & training

Department:
Higher Education and Training
REPUBLIC OF SOUTH AFRICA

NATIONAL CERTIFICATE

PLATING AND STRUCTURAL STEEL DRAWING N2

(8090102)

20 April 2021 (X-paper)
09:00–13:00

REQUIREMENTS: **ONE sheet of A2 drawing paper**

Nonprogrammable calculators may be used.

This question paper consists of 4 pages and 2 diagram sheets.

256Q1A2120

Copyright reserved

DEPARTMENT OF HIGHER EDUCATION AND TRAINING
REPUBLIC OF SOUTH AFRICA

NATIONAL CERTIFICATE
PLATING AND STRUCTURAL STEEL DRAWING N2
TIME: 4 HOURS
MARKS: 100

NOTE: If you answer more than the required number of questions only the required number will be marked. Clearly cross out ALL work you do NOT want to be marked.

INSTRUCTIONS AND INFORMATION

1. Answer ANY FOUR questions
2. Read ALL the questions carefully.
3. Number the answers according to the numbering system used in this question paper.
4. Show ALL construction lines.
5. Do TWO questions on the front and TWO questions on the reverse side of the DRAWING SHEET.
6. Add any two dimensions to the answers.
7. Work neatly.

Copyright reserved

QUESTION 1

FIGURE 1, DIAGRAM SHEET 1 (attached), shows TWO incomplete views of an intersection between a triangular pipe and a conical hood.

1.1	Draw the given views	(2)
1.2	Determine the line of penetration	(6)
1.3	Develop the pattern for the triangular pipe	(6)
1.4	Develop the shape of the hole in the cone.	(6)

Mark allocation for drawing office practice for the above question is as follows:

Dimensions	(2)
Line work	(3)

SCALE 1:1

TOTAL [25]

QUESTION 2

FIGURE 2, DIAGRAM SHEET 2 (attached), shows a twisted rectangular ducting with a round corner.

2.1	Draw the front view	(1)
2.2	Draw the top view	(1)
2.3	Develop the pattern of the plate for the ducting.	(18)

Mark allocation for drawing office practice for the above question is as follows:

Dimensions	(2)
Line work	(3)

SCALE 1:1

TOTAL [25]

Copyright reserved

QUESTION 3

FIGURE 3, DIAGRAM SHEET 2 (attached), shows a connection between two truncated right cones and a cylindrical pipe. Make use of the common central sphere method to draw the following:

3.1	Draw the given front view	(2)
3.2	Determine the line of penetration.	(6)
3.3	Develop the cone marked “C”.	(6)
3.4	Develop the cylinderical pipe marked “P”.	(6)

Mark allocation for drawing office practice for the above question is as follows:

Dimensions	(2)
Line work	(3)
SCALE 1:1	**[25]**

QUESTION 4

FIGURE 4, DIAGRAM SHEET 3 (attached), shows part of a rectangular tank fitted with an oblique pipe at an angle of 60º to the horizontal.

4.1	Draw the given view	(2)
4.2	Develope the pattern of the oblique pipe.	(12)
4.3	Draw the true shape of the hole as seen in the direction of T-T.	(6)

Mark allocation for drawing office practice for the above question is as follows:

Dimensions	(2)
Line work	(3)
SCALE 1:2	**[25]**

Copyright reserved

QUESTION 5

FIGURE 5, DIAGRAM SHEET 3 (attached), shows an intersection between a cylindrical main pipe and a lobster-back branch pipe.

5.1	Draw the given front view	(3)
5.2	Determine by construction the line of penetration	(6)
5.3	Develop the pattern for the segment marked 'X'.	(5)
5.4	Develop the pattern for the segment marked 'Y'.	(6)

Mark allocation for drawing office practice for the above question is as follows:

Dimensions	(2)
Line work	(3)
SCALE 1:2	**[25]**
TOTAL:	**100**

Copyright reserved

DIAGRAM SHEET 1

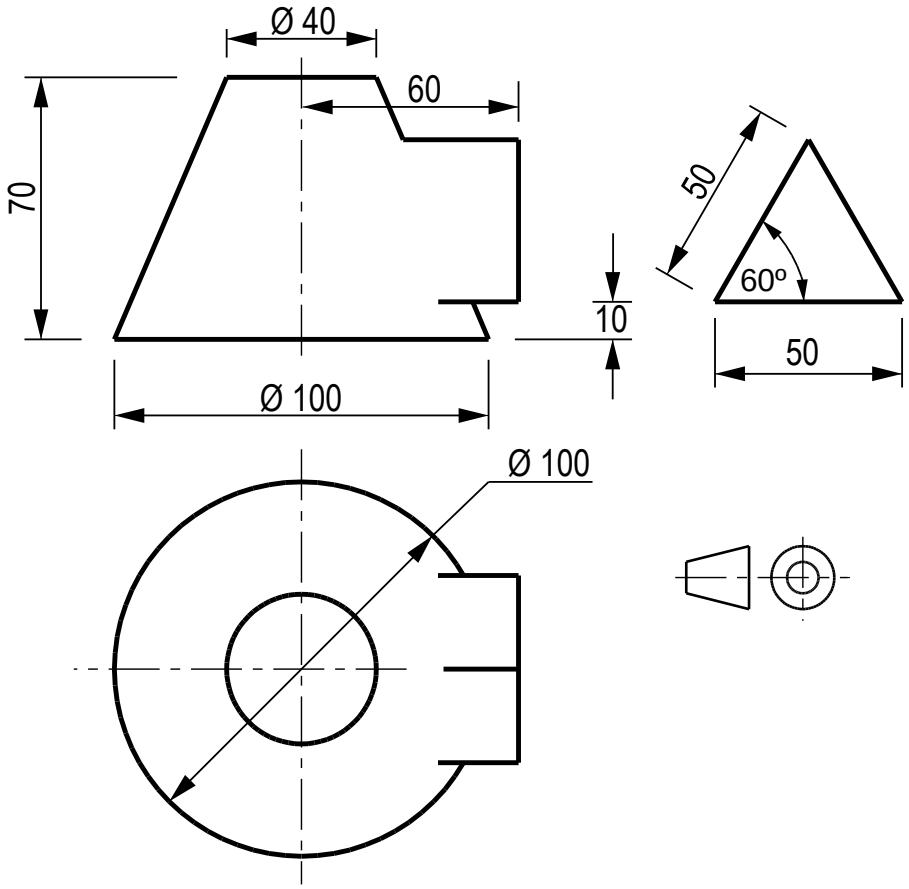

FIGURE 1

DIAGRAM SHEET 2

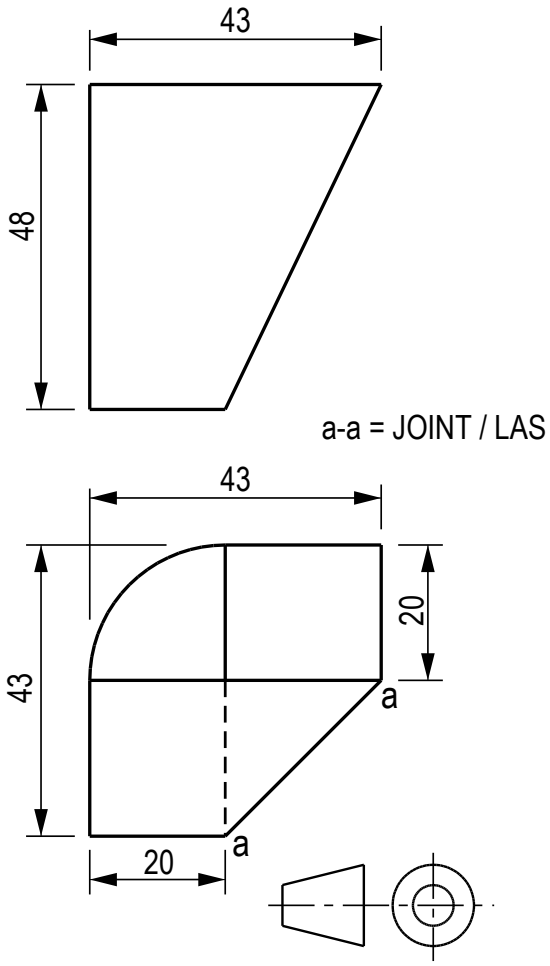

FIGURE 2

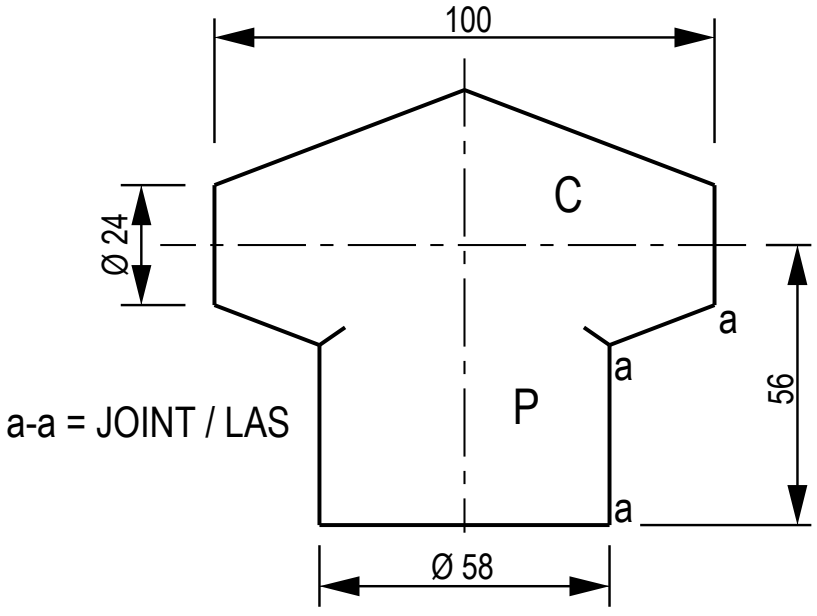

FIGURE 3

Copyright reserved

DIAGRAM SHEET 3

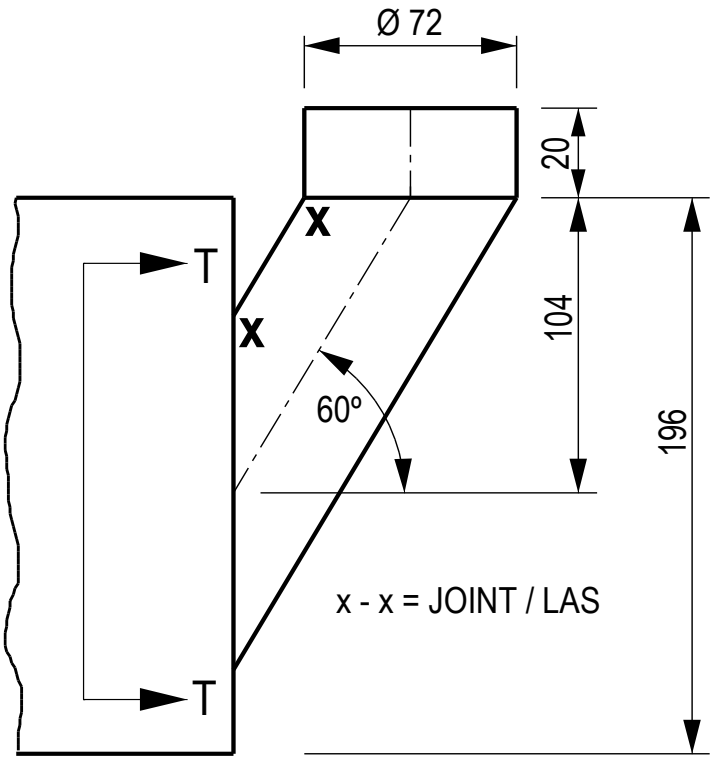

FIG 4

FIGURE 4

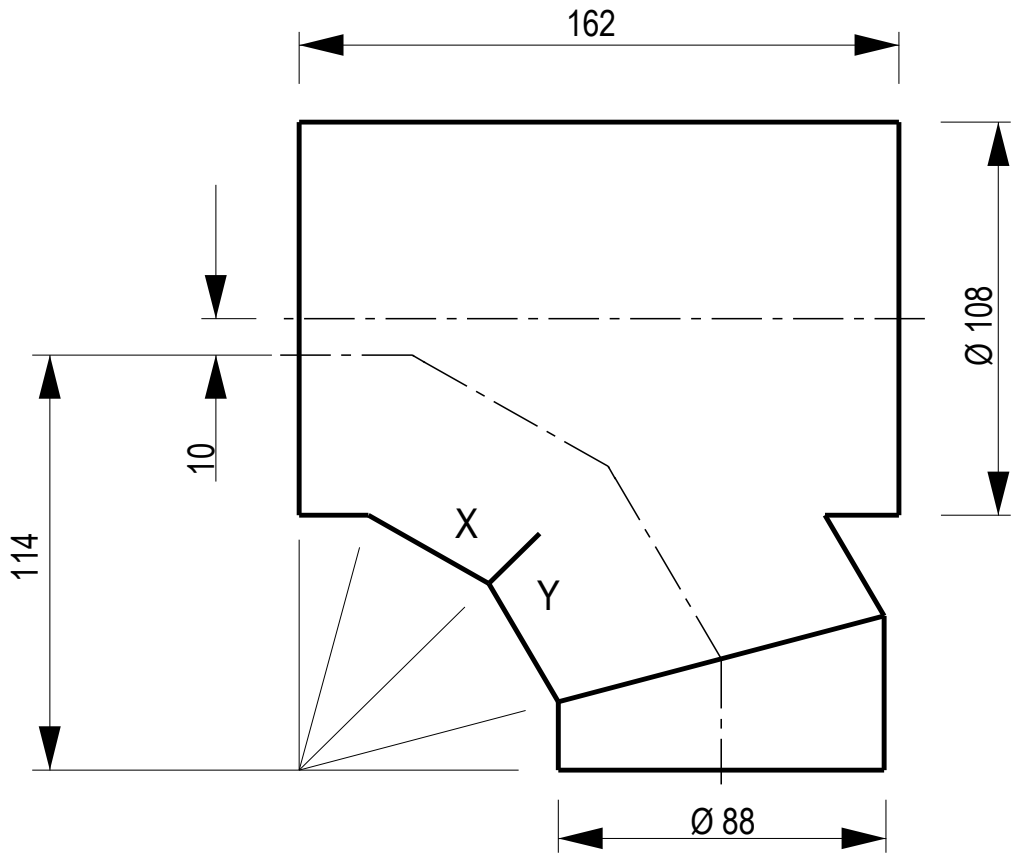

FIGURE 5

Copyright reserved