higher education & training

Department:
Higher Education and Training
REPUBLIC OF SOUTH AFRICA

MARKING GUIDELINE

NATIONAL CERTIFICATE

PLATING AND STRUCTURAL STEEL DRAWING N2

20 APRIL 2021

This marking guideline consists of 7 pages.

NOTE: DURING PRINTING PART OF THE MEMORANDUM WILL BE CUT OFF AND NO TICKS TO SHOW MARK DISTRIBUTION.

Copyright reserved

FIGURE 1a

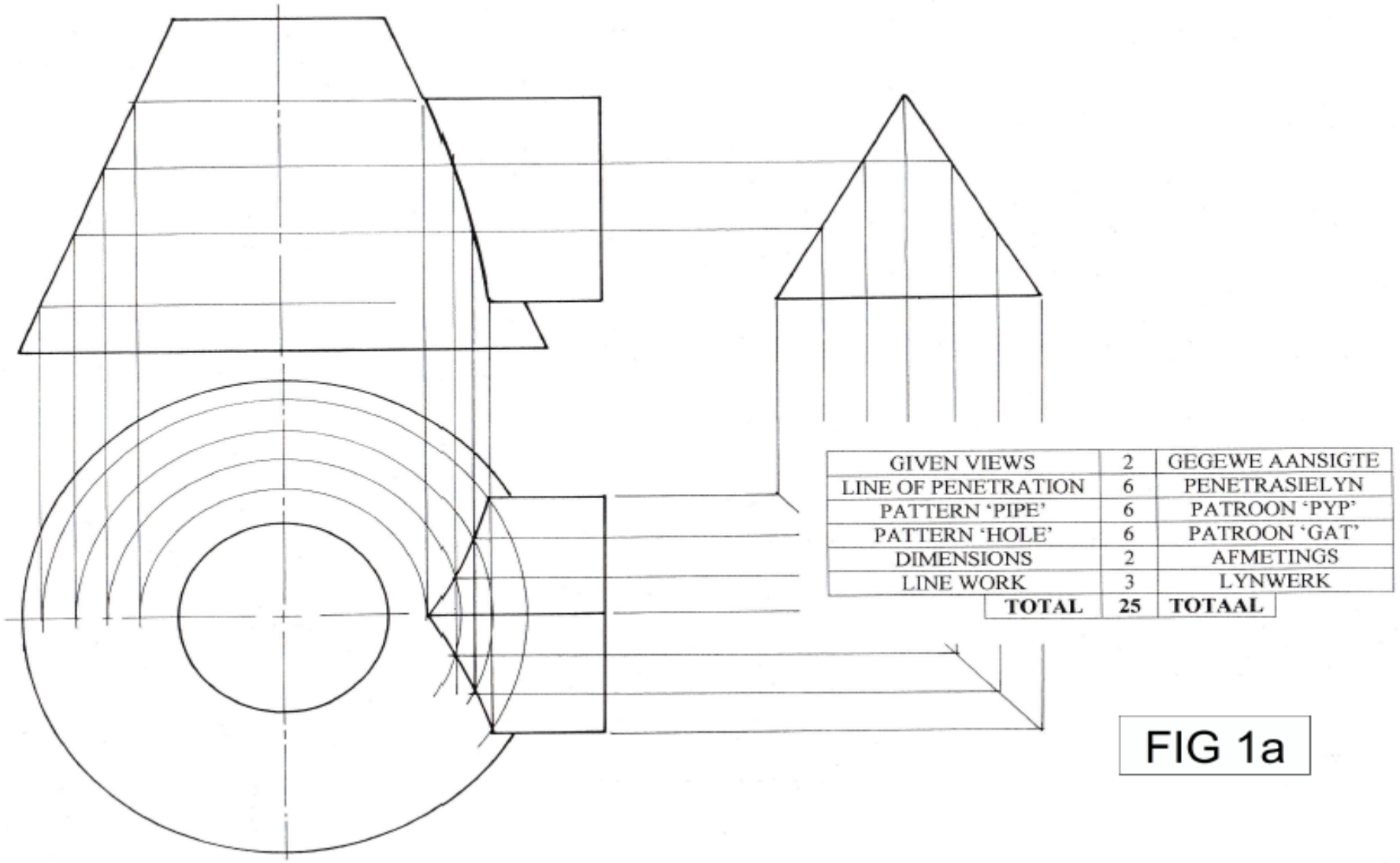

GIVEN VIEWS	2	GEGEWE AANSIGTE
LINE OF PENETRATION	6	PENETRASIELYN
PATTERN 'PIPE'	6	PATROON 'PYP'
PATTERN 'HOLE'	6	PATROON 'GAT'
DIMENSIONS	2	AFMETINGS
LINE WORK	3	LYNWERK
TOTAL	**25**	**TOTAAL**

FIG 1a

Copyright reserved

Figure 1b

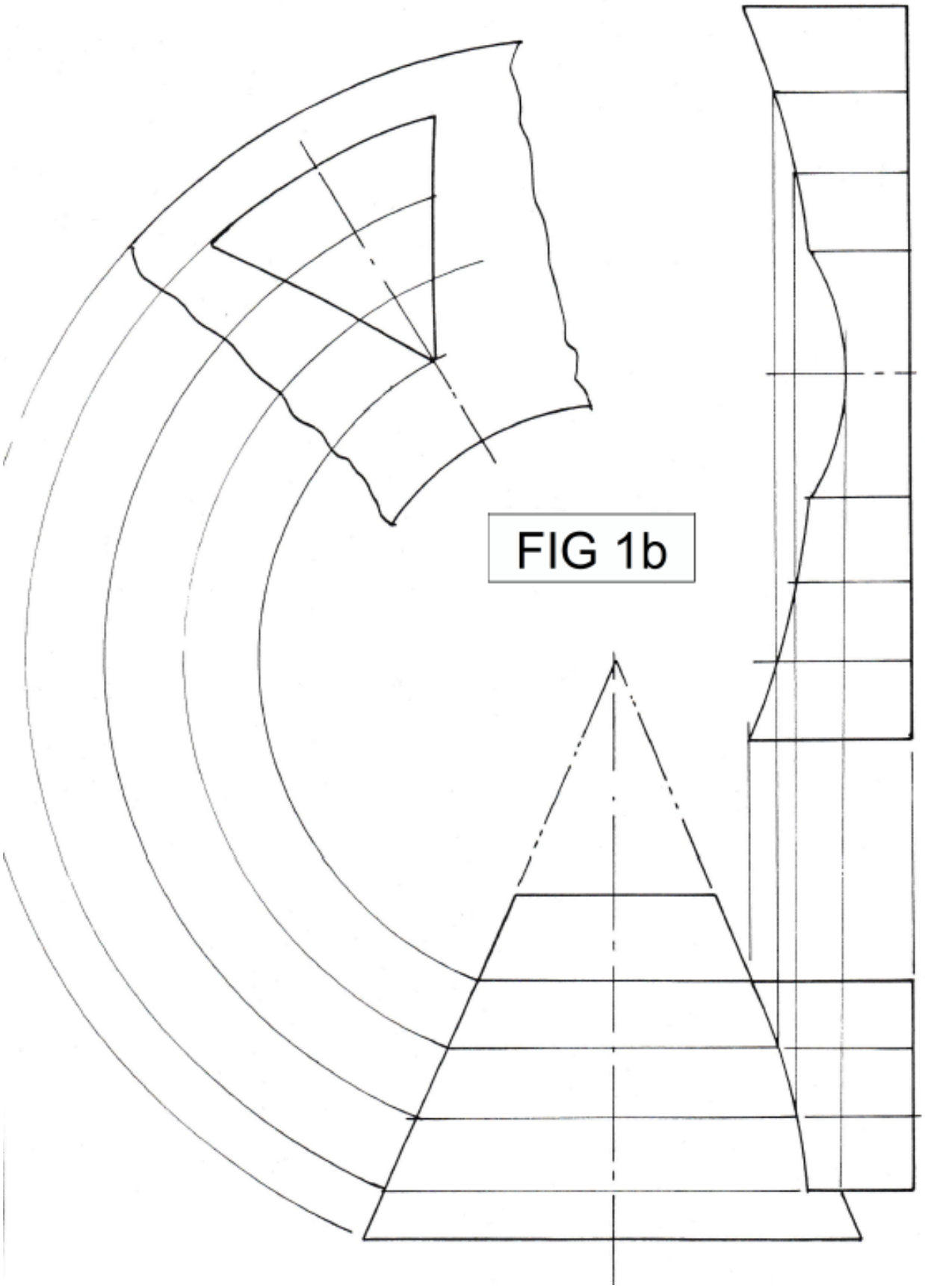

Copyright reserved

FIGURE 2

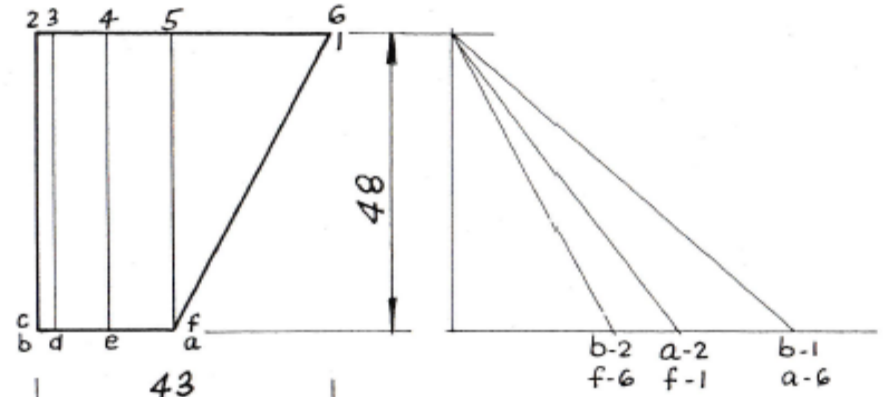

FRONT VIEW	1	VOORAANSIG
TOP VIEW	1	BOAANSIG
DEVELOPMENT	18	ONTWIKKELING
DIMENSIONS	2	AFMETINGS
LINE WORK	3	LYNWERK
TOTAL	**25**	**TOTAAL**

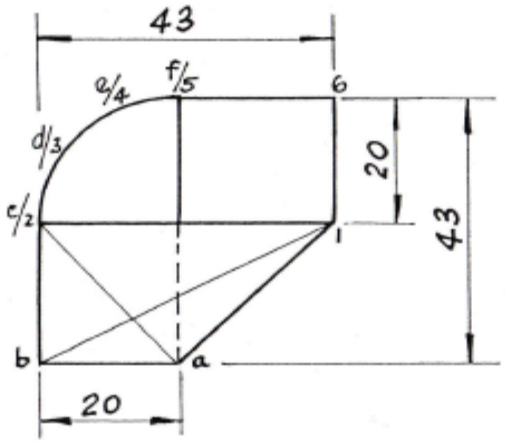

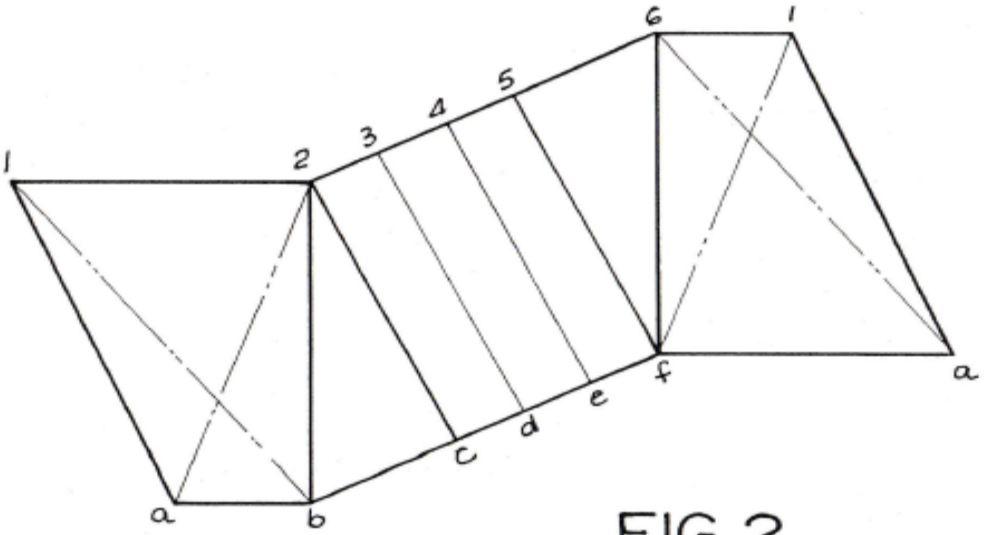

FIG. 2

Copyright reserved

FIGURE 3

FRONT VIEW	2	VOORAANSIG
LINE OF PENETRATION	6	PENETRASIELYN
DEVELOPMENT CONE	6	ONTWIKKELING KEEL
DEVELOPMENT PIPE	6	ONTWIKKELING PYP
DIMENSIONS	2	AFMETINGS
LINE WORK	3	LYNWERK
TOTAL	**25**	**TOTAAL**

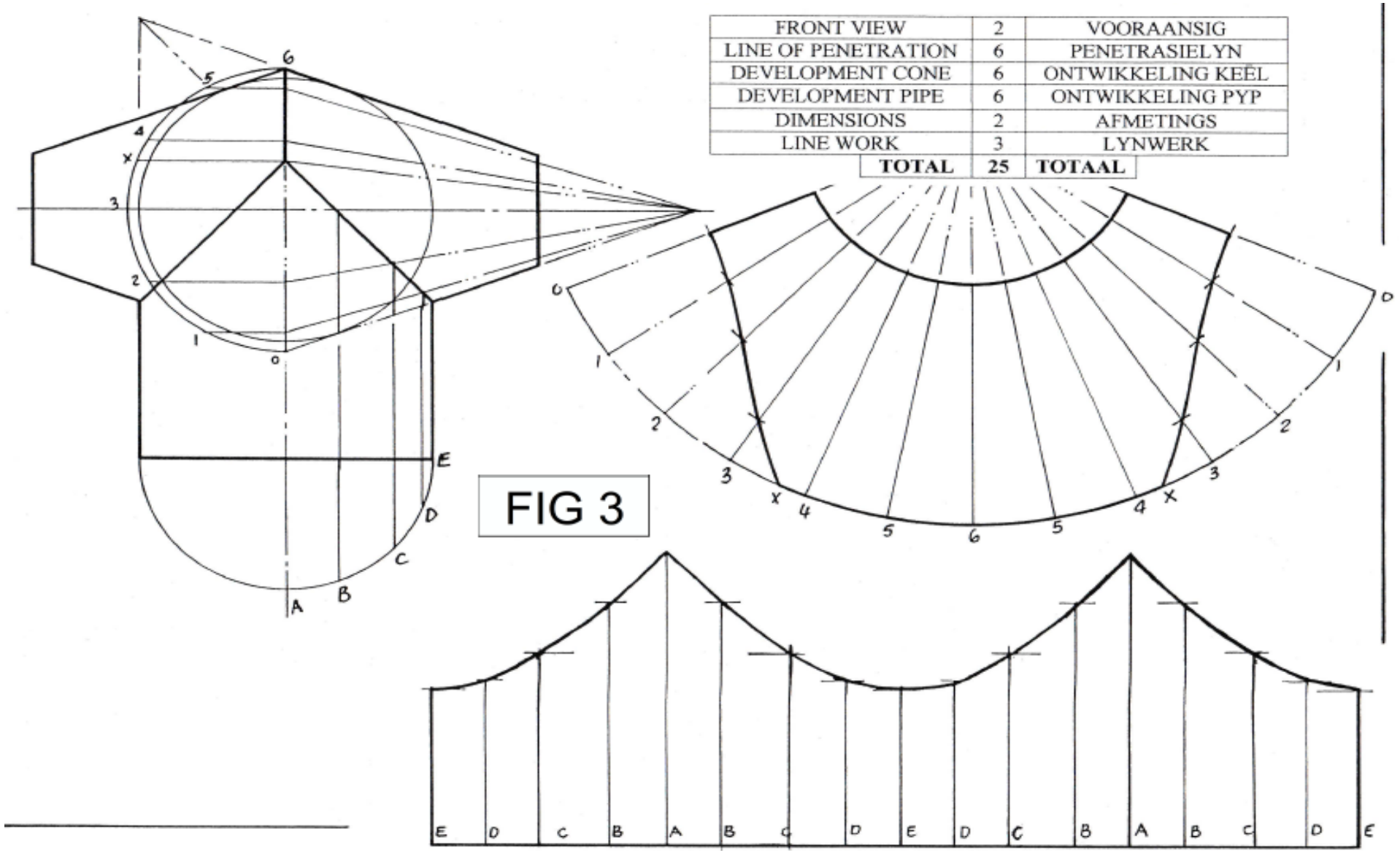

Copyright reserved

FIGURE 4

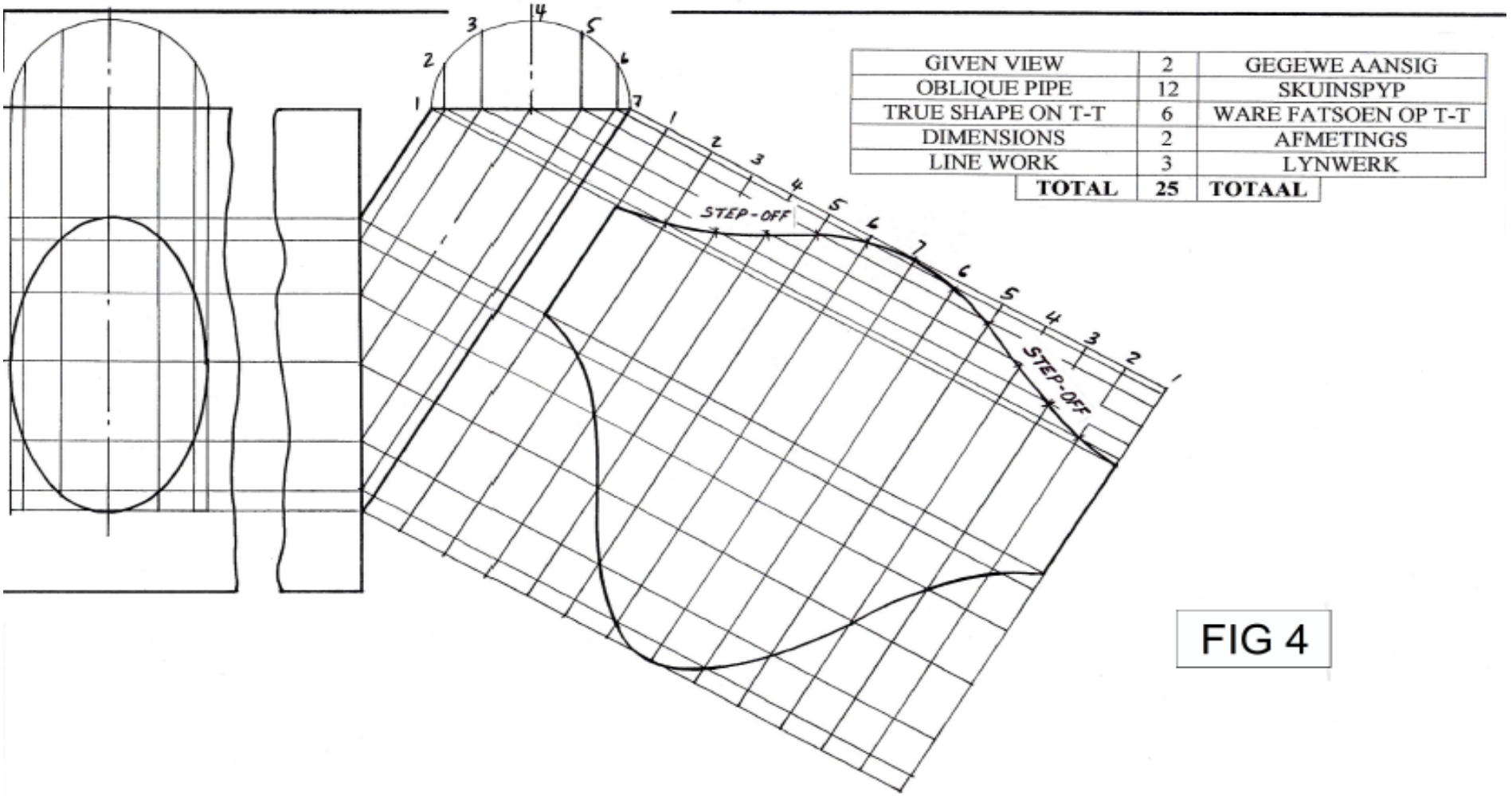

GIVEN VIEW	2	GEGEWE AANSIG
OBLIQUE PIPE	12	SKUINSPYP
TRUE SHAPE ON T-T	6	WARE FATSOEN OP T-T
DIMENSIONS	2	AFMETINGS
LINE WORK	3	LYNWERK
TOTAL	**25**	**TOTAAL**

FIG 4

Copyright reserved

FIGURE 5

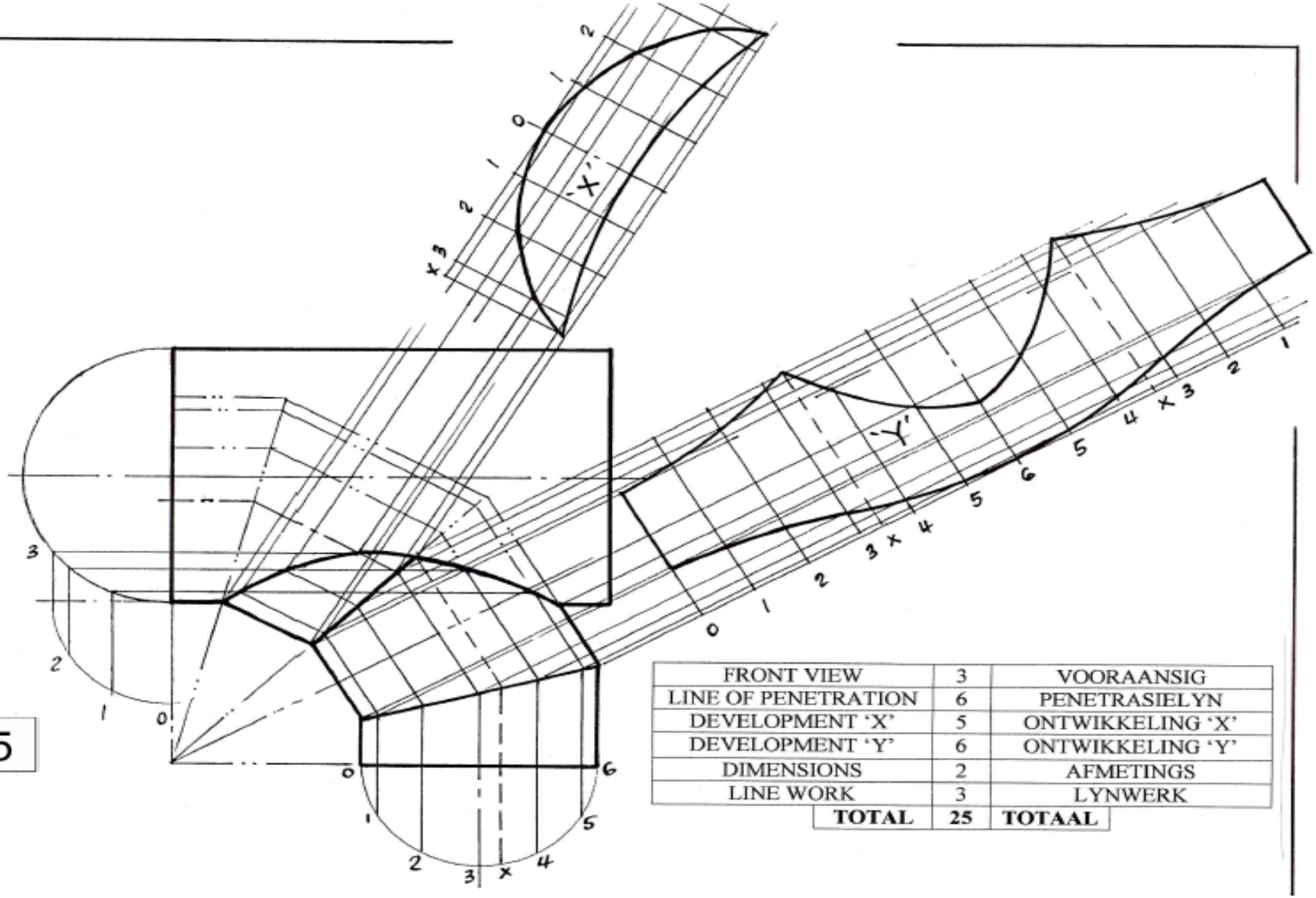

FRONT VIEW	3	VOORAANSIG
LINE OF PENETRATION	6	PENETRASIELYN
DEVELOPMENT 'X'	5	ONTWIKKELING 'X'
DEVELOPMENT 'Y'	6	ONTWIKKELING 'Y'
DIMENSIONS	2	AFMETINGS
LINE WORK	3	LYNWERK
TOTAL	**25**	**TOTAAL**

Copyright reserved