higher education & training

Department:
Higher Education and Training
REPUBLIC OF SOUTH AFRICA

NATIONAL CERTIFICATE

PLATING AND STRUCTURAL STEEL DRAWING N2

(8090102)

15 April 2020 (X-paper)
09:00–13:00

REQUIREMENTS: ONE A2 drawing sheet

Nonprogrammable calculators may be used.

This question paper consists of 4 pages and 3 diagram sheets.

256Q1A2015

Copyright reserved

DEPARTMENT OF HIGHER EDUCATION AND TRAINING
REPUBLIC OF SOUTH AFRICA

NATIONAL CERTIFICATE
PLATING AND STRUCTURAL STEEL DRAWING N2
TIME: 4 HOURS
MARKS: 100

NOTE: If you answer more than the required number of questions only the required number will be marked. Clearly cross out ALL work you do NOT want to be marked.

INSTRUCTIONS AND INFORMATION

1. Answer any FOUR questions
2. Read all the questions carefully.
3. Number the answers according to the numbering system used in this question paper.
4. Show all construction lines.
5. Do TWO questions on the front and TWO questions on the reverse side of the DRAWING SHEET.
6. Add any two dimensions to the answers.
7. Work neatly.

Copyright reserved

QUESTION 1

FIGURE 1, DIAGRAM SHEET 1 (attached), shows the following parts of a column base:

Item 1:	Column	356 × 171 mm I-beam (t = 10 mm)	1 off
Item 2:	Base plate	600 × 560 × 16 mm	1 off
Item 3:	Side plate	500 × 300 × 10 mm (shaped)	2 off
Item 4:	Side angle	150 × 90 × 10 mm angle iron	2 off

Draw, to scale 1:5, the following views as an assembly drawing in first-angle orthographic projection:

1.1 The front view with the flange of the column in view (8)

1.2 The top view (9)

Mark allocation for drawing office practice for the above question is as follows:

Mark allocation for any two dimensions. (2)

Mark allocation for line work (3)

Print the title 'COLUMN BASE' centrally beneath the two views. (1)

Print the scale (1)

Insert the Projection symbol (1)

TOTAL [25]

QUESTION 2

FIGURE 2, DIAGRAM SHEET 1 (attached), shows two views of a half round-to-round transformer.

Draw, to scale 1:1, the following:-

2.1 The given views. (3)

2.2 Develop the pattern of the plate for the transformer. (17)

Mark allocation for drawing office practice for the above question is as follows:

Mark allocation for any two dimensions. (2)

Mark allocation for line work (3)

TOTAL [25]

Copyright reserved

QUESTION 3

FIGURE 3, DIAGRAM SHEET 2 (attached), shows the front view of a Y-piece.

Draw, to scale 1:10

3.1 The given view. (2)

3.2 Develop the pattern of part A. (18)

Mark allocation for drawing office practice for the above question is as follows:

Mark allocation for any two dimensions. (2)

Mark allocation for line work (3)

TOTAL [25]

QUESTION 4

FIGURE 4, DIAGRAM SHEET 2 (attached), shows the front and top views of a pyramidal cover.
Draw to scale 1:1, the following: -

4.1 The front view. (1)

4.2 The top view. (2)

4.3 The development of the pattern of the plate for the pyramidal cover. (17)

Mark allocation for drawing office practice for the above question is as follows:

Mark allocation for any two dimensions. (2)

Mark allocation for line work (3)

TOTAL [25]

Copyright reserved

QUESTION 5

FIGURE 5, DIAGRAM SHEET 3 (attached), shows an oblique T-piece with a square branch pipe.
Draw, to scale 1:2, the following: -

5.1 The front view. (2)

5.2 The left view. (2)

5.3 The development of the pattern of the branch pipe A. (8)

5.4 The shape of the hole in the main pipe B.  (8)

Mark allocation for drawing office practice for the above question is as follows:

Mark allocation for any two dimensions. (2)

Mark allocation for line work (3)

TOTAL [25]

GRAND TOTAL: 100

Copyright reserved

DIAGRAM SHEET 1

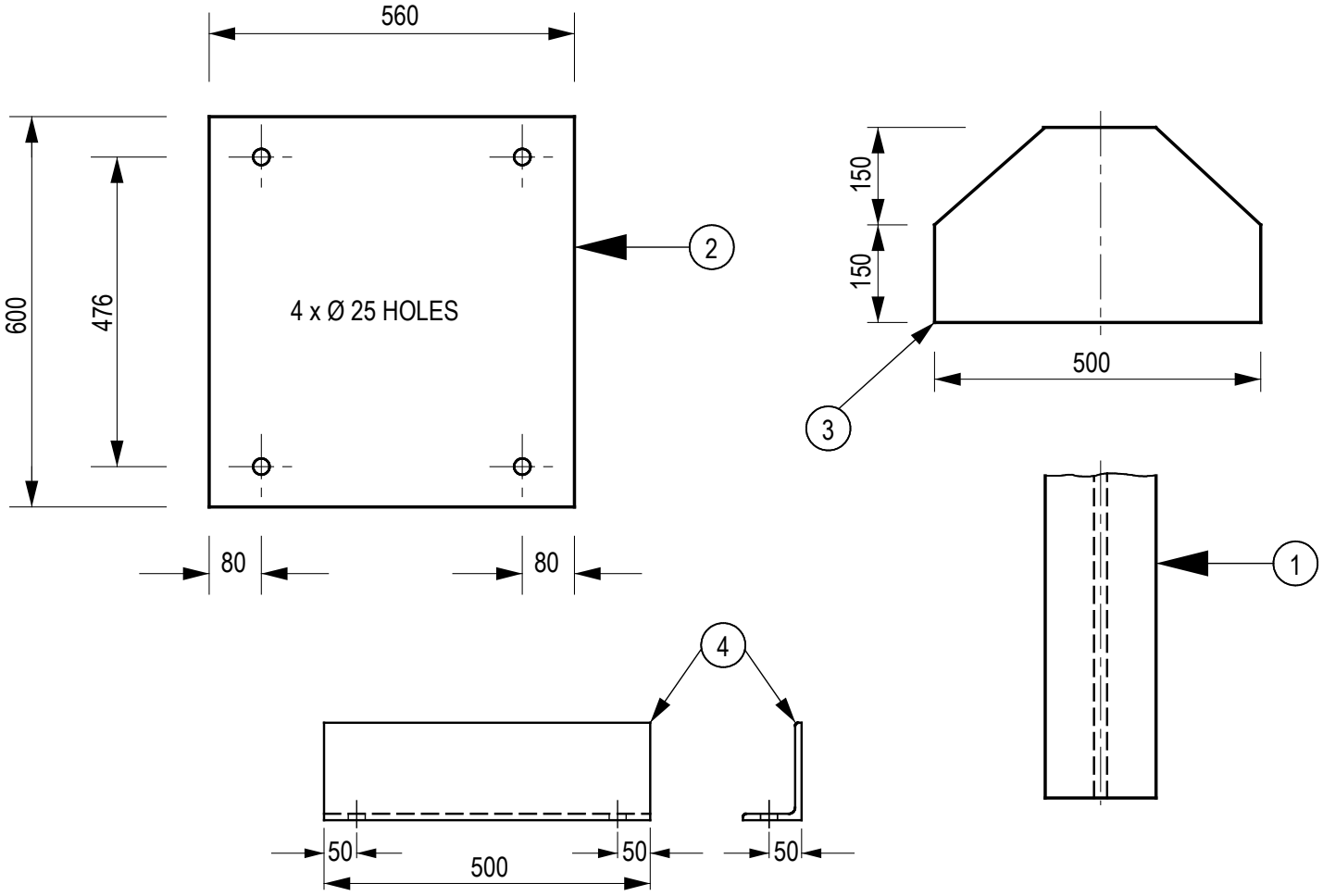

FIGURE 1

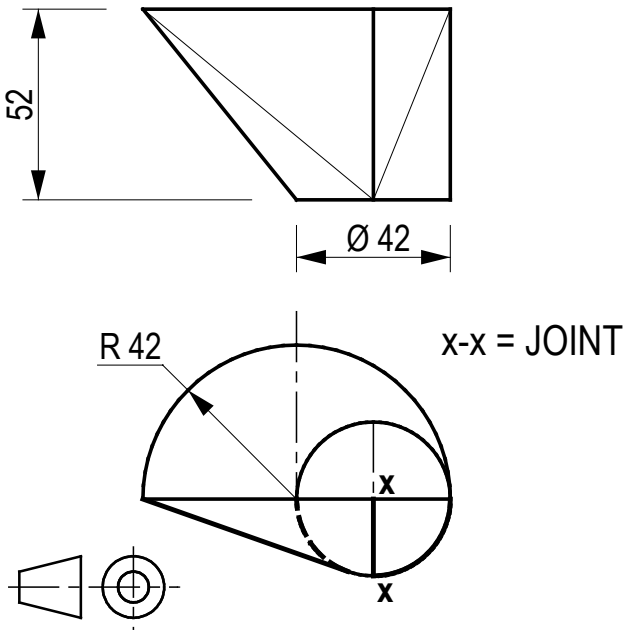

FIGURE 2

Copyright reserved

DIAGRAM SHEET 2

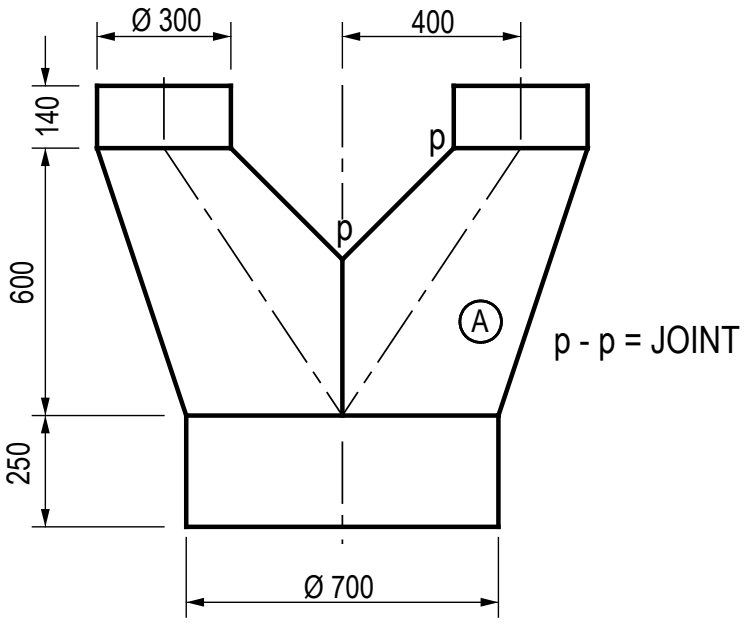

FIGURE 3

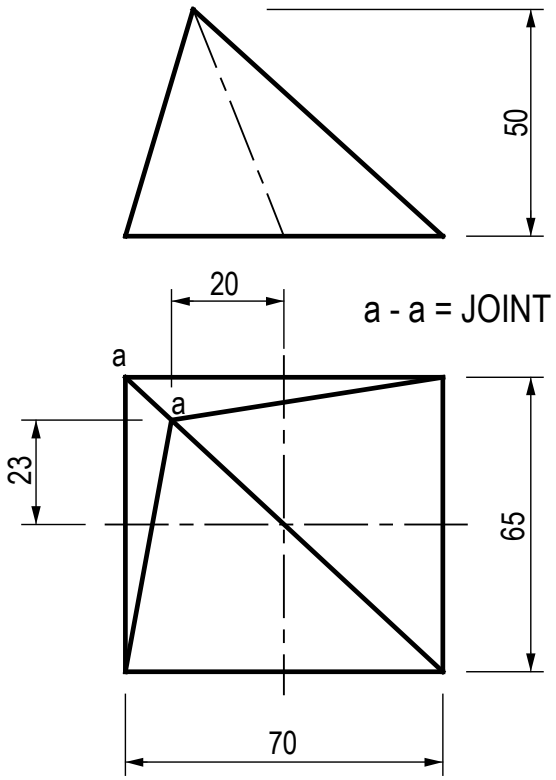

FIGURE 4

Copyright reserved

DIAGRAM SHEET 3

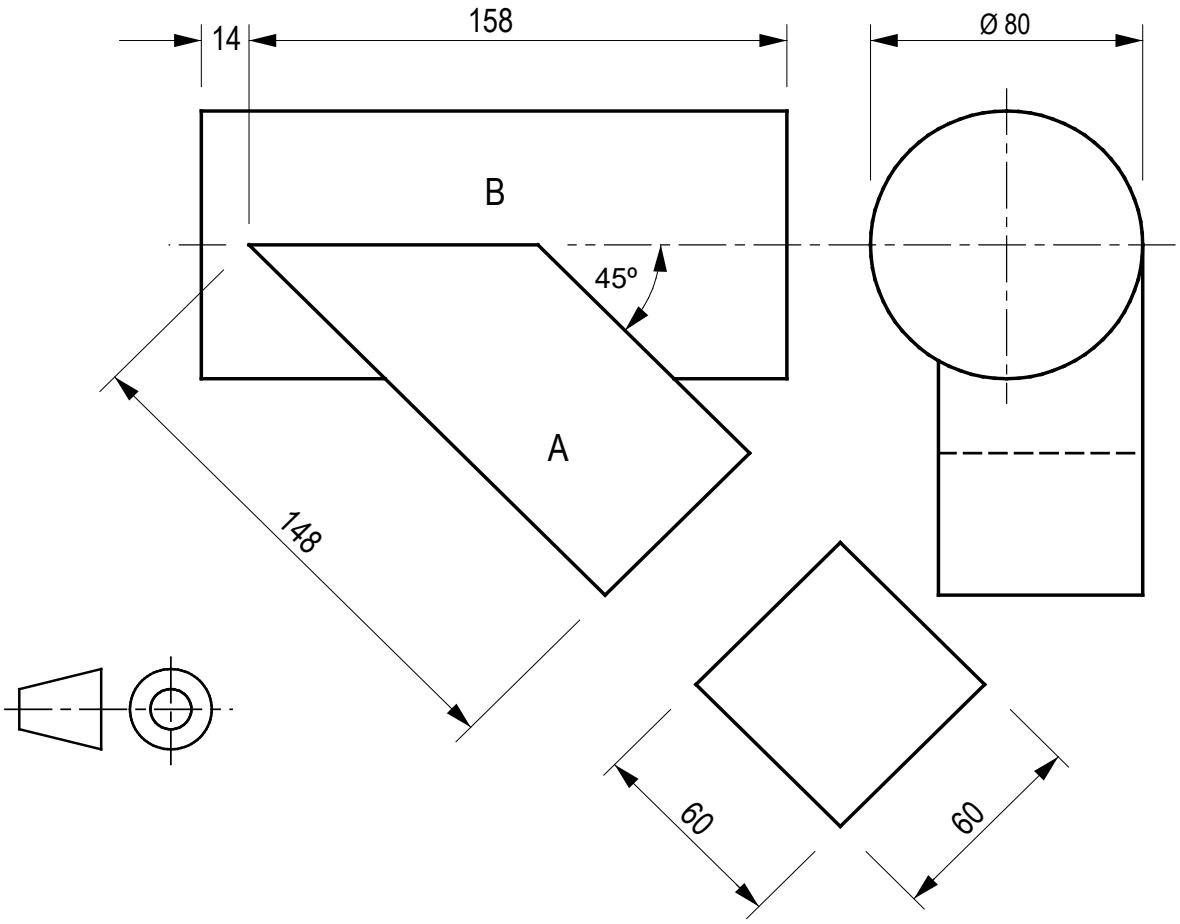

FIGURE 5

Copyright reserved