higher education & training

Department:
Higher Education and Training
REPUBLIC OF SOUTH AFRICA

MARKING GUIDELINE

NATIONAL CERTIFICATE

PLATING AND STRUCTURAL STEEL DRAWING N2

15 April 2020

This marking guideline consists of 6 pages.

THIS MARKING GUIDELINE CANNOT BE USED AS A MARKING TOOL AS IT IS NOT ACCORDING TO SCALE.

Copyright reserved

SECTION A

QUESTION 1

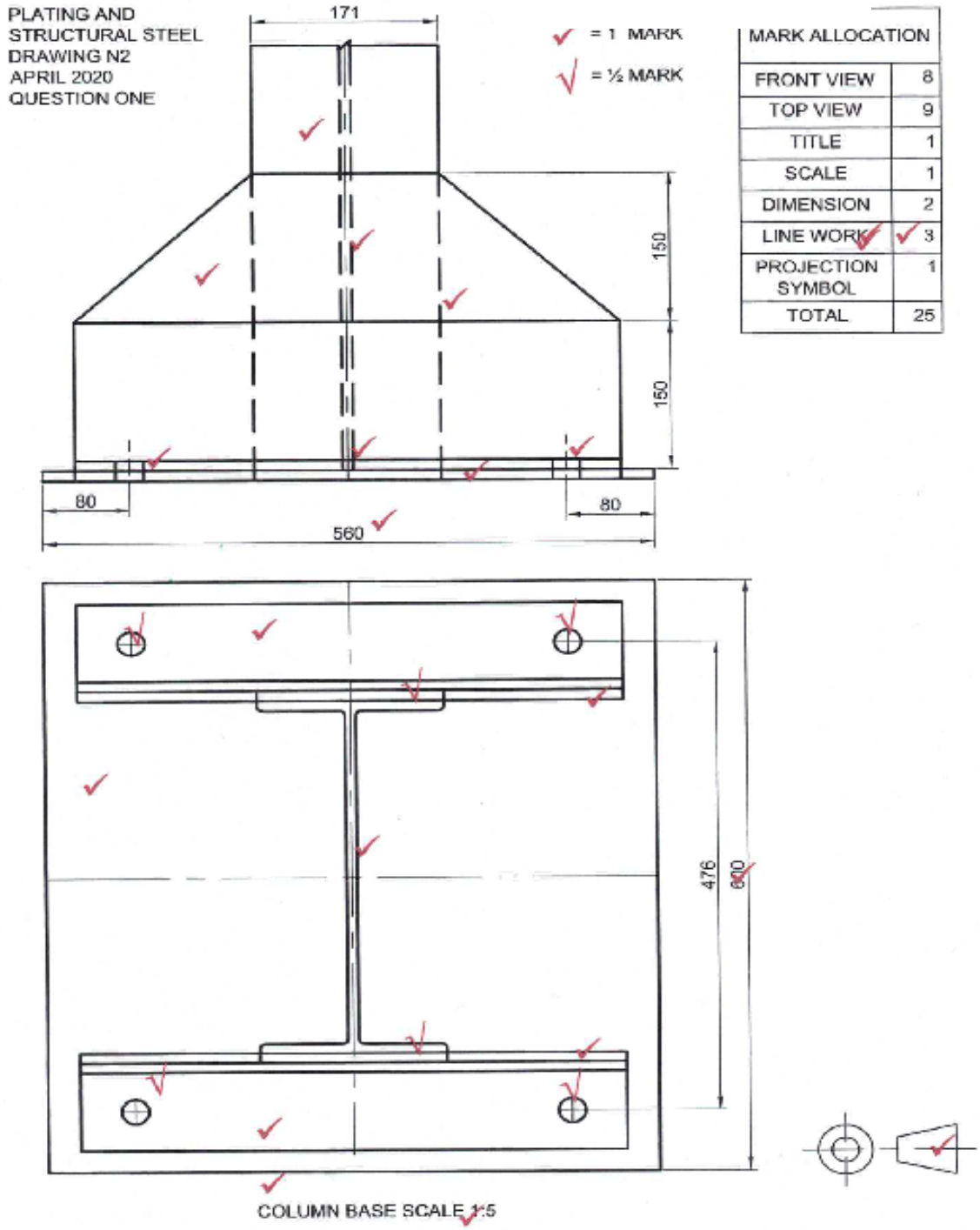

MARK ALLOCATION	
FRONT VIEW	8
TOP VIEW	9
TITLE	1
SCALE	1
DIMENSION	2
LINE WORK	3
PROJECTION SYMBOL	1
TOTAL	25

TOTAL SECTION A: 25

SECTION B

QUESTION 2

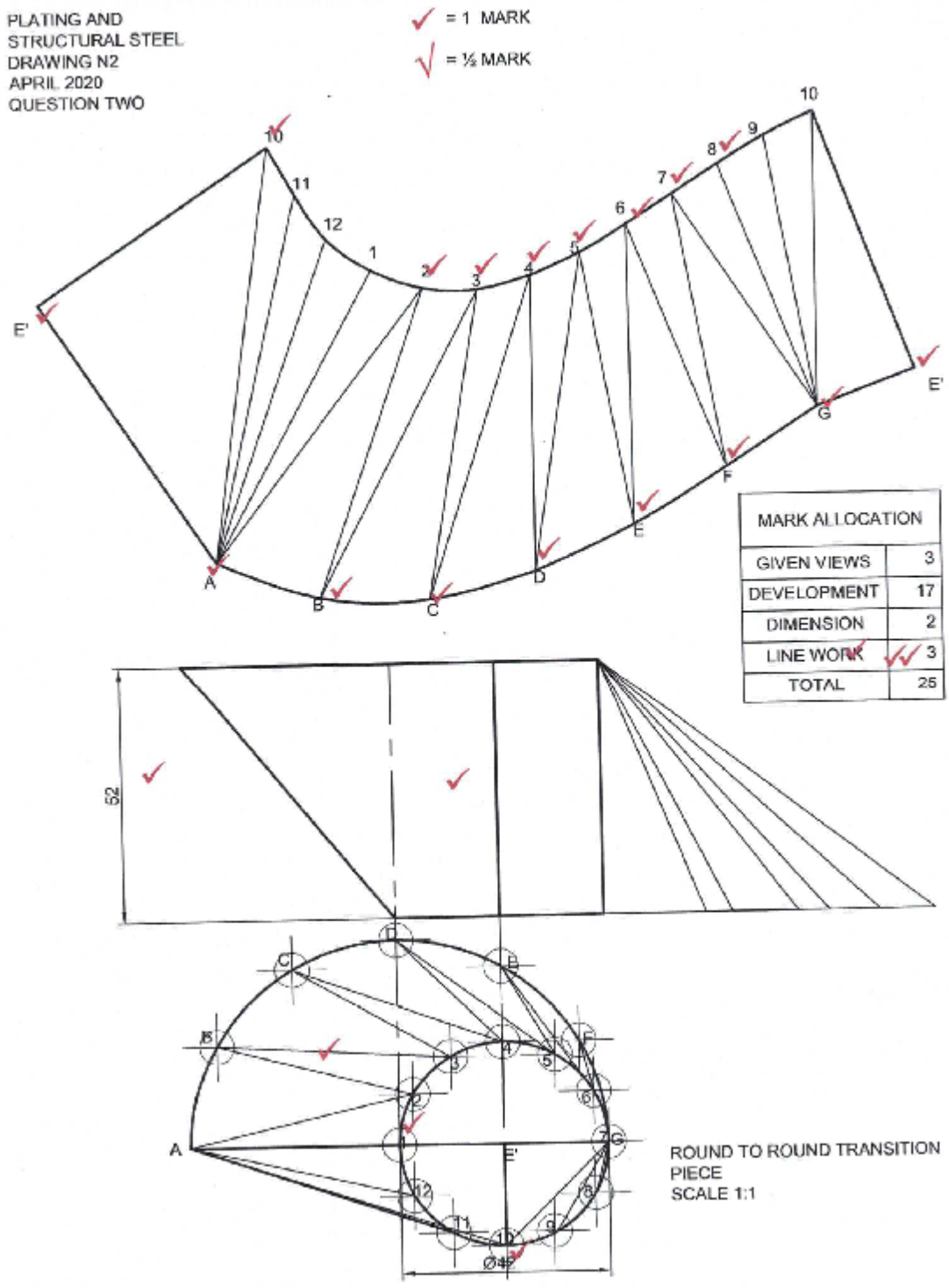

MARK ALLOCATION	
GIVEN VIEWS	3
DEVELOPMENT	17
DIMENSION	2
LINE WORK	3
TOTAL	25

QUESTION 3

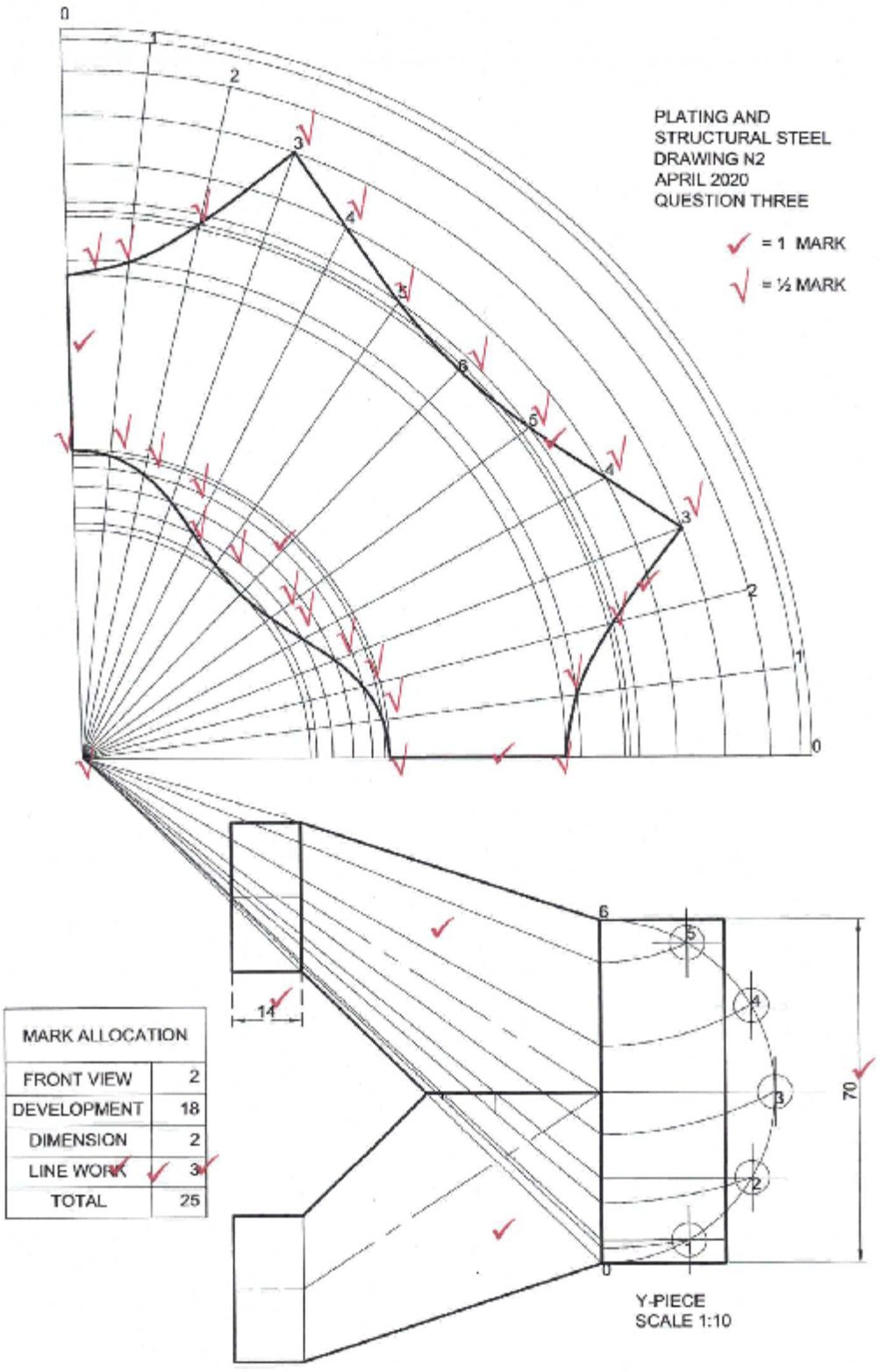

MARK ALLOCATION	
FRONT VIEW	2
DEVELOPMENT	18
DIMENSION	2
LINE WORK	3
TOTAL	25

QUESTION 4

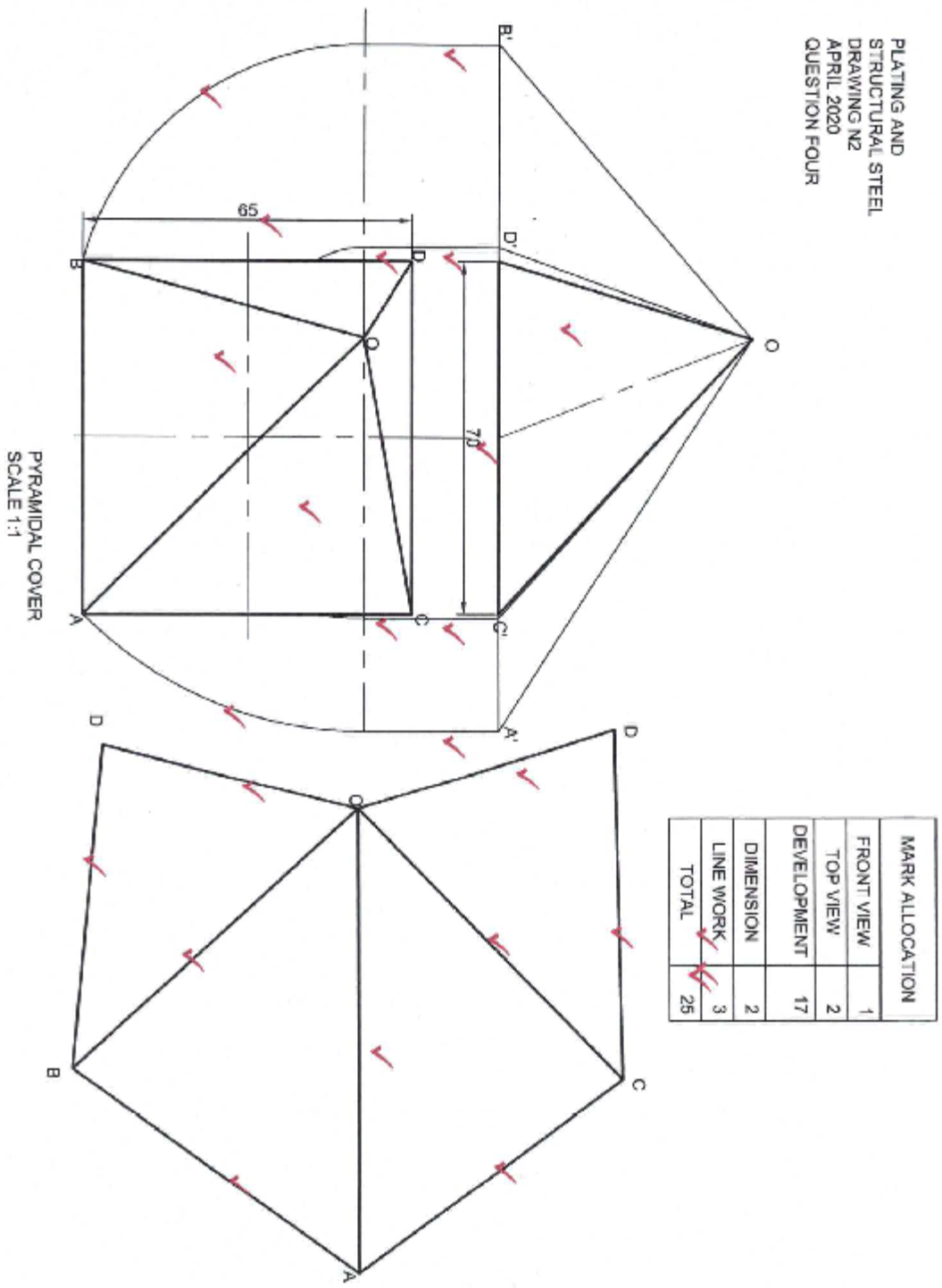

MARK ALLOCATION	
FRONT VIEW	1
TOP VIEW	2
DEVELOPMENT	17
DIMENSION	2
LINE WORK	3
TOTAL	25

[25]

QUESTION 5

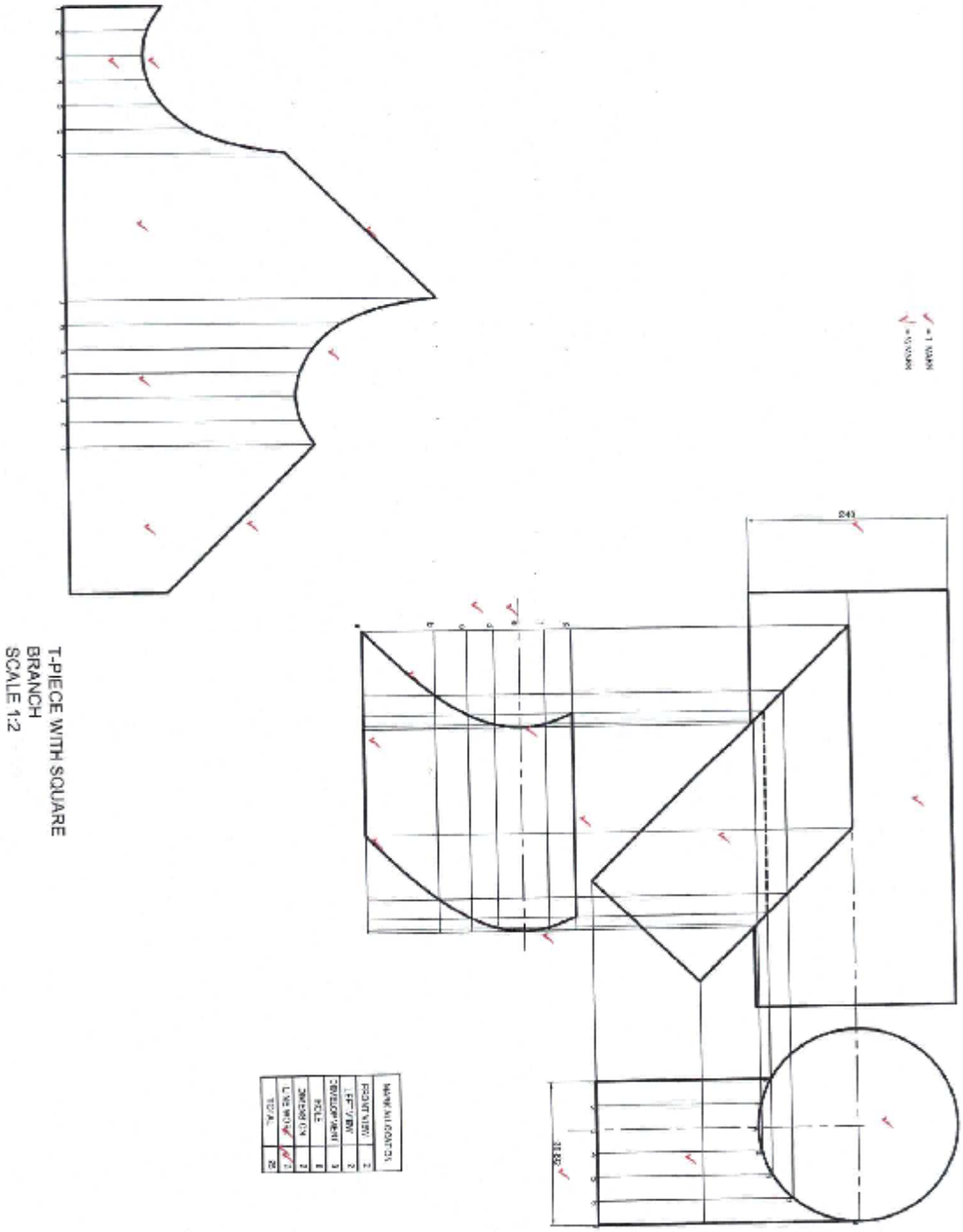

[25]

TOTAL SECTION B: 75
GRAND TOTAL: 100

Copyright reserved