higher education & training

Department:
Higher Education and Training
REPUBLIC OF SOUTH AFRICA

T1340**(E)**(A10)T

NATIONAL CERTIFICATE

PLATING AND STRUCTURAL STEEL DRAWING N2

(8090102)

10 April 2019 (X-Paper)
09:00–13:00

REQUIREMENTS: ONE A2 drawing sheet

Calculators may be used.

This question paper consists of 5 pages and 2 diagram sheets.

Copyright reserved

TIME: 4 HOURS
MARKS: 100

NOTE: If you answer more than THREE questions in SECTION B, only the first THREE questions will be marked. Clearly cross out ALL work you do NOT want to be marked.

INSTRUCTIONS AND INFORMATION

1. Answer QUESTION 1 in SECTION A.
2. Answer any THREE questions in SECTION B.
3. Read ALL the questions carefully.
4. Number the answers according to the numbering system used in this question paper.
5. Show ALL construction lines.
6. Answer TWO questions on the front and TWO questions on the reverse side of the DRAWING SHEET.
7. Add dimensions to the answers.
8. Work neatly.

Copyright reserved

SECTION A (COMPULSORY)

QUESTION 1

FIGURE 1, DIAGRAM SHEET 1 (attached), shows the front view of a welded stanchion connection. One I-beam and a gusset plate are welded to the web of the I-column section on the nearside only. One I-beam and a gusset plate, on the centre line, are welded to each flange of the I-column section.

Draw, to scale 1:5, the following in first-angle orthographic projection:

1.1 The given front view (3)

1.2 The left view (7)

1.3 The top view (7)

Mark allocation for drawing office practice for the above question is as follows:

Title and Scale (1)

Dimensions (2)

Line work (3)

Projection symbol (2)

Print the title 'WELDED STANCHION' and scale centred beneath the top view.

Material:

Item 1:	350 × 150 × 10 thickness I-column (parallel flange)	400 mm long	1 off
Item 2:	200 × 100 × 10 thickness I-beam (parallel flange)	200 mm long	3 off
Item 3:	125 × 125 gusset plate	10 mm thick	3 off

TOTAL SECTION A: 25

Copyright reserved

SECTION B

QUESTION 2

FIGURE 2, DIAGRAM SHEET 1 (attached), shows the front and top views of a transition piece.

Draw, to scale 1:1:

2.1 The front view (1)

2.2 The top view (2)

2.3 The development of the pattern of the plate for the transition piece (17)

Mark allocation for drawing office practice for the above question is as follows:

Dimensions (2)

Line work (3)

TOTAL : 25

QUESTION 3

FIGURE 3, DIAGRAM SHEET 2 (attached), shows the front view of cylinders and a gusset plate forming a junction.

Draw, to scale 1:1

3.1 The given view (3)

3.2 The pattern for the gusset plate marked L (8)

3.3 The pattern for the pipe marked M (9)

Mark allocation for drawing office practice for the above question is as follows:

Dimensions (2)

Line work (3)

TOTAL : 25

Copyright reserved

QUESTION 4

FIGURE 4, DIAGRAM SHEET 2 (attached), shows a lobster back bend made of oblique cylinders.

Draw, to scale 1:10:

4.1 The given view (3)

4.2 The pattern for segment A (9)

4.3 The shape of the pipe at section B-B (8)

Mark allocation for drawing office practice for the above question is as follows:

Dimensions (2)

Line work (3)

TOTAL : 25

QUESTION 5

FIGURE 5, DIAGRAM SHEET 2 (attached), shows a junction between a hexagonal pipe and a round pipe.

Draw, to scale 1:1:

5.1 The given views (3)

5.2 The line of penetration (6)

5.3 The pattern for the hexagonal pipe D (6)

5.4 The shape of the hole in the round pipe E (5)

Mark allocation for drawing office practice for the above question is as follows:

Dimensions (2)

Line work (3)

TOTAL : 25

TOTAL SECTION B: 75
GRAND TOTAL: 100

Copyright reserved

DIAGRAM SHEET 1

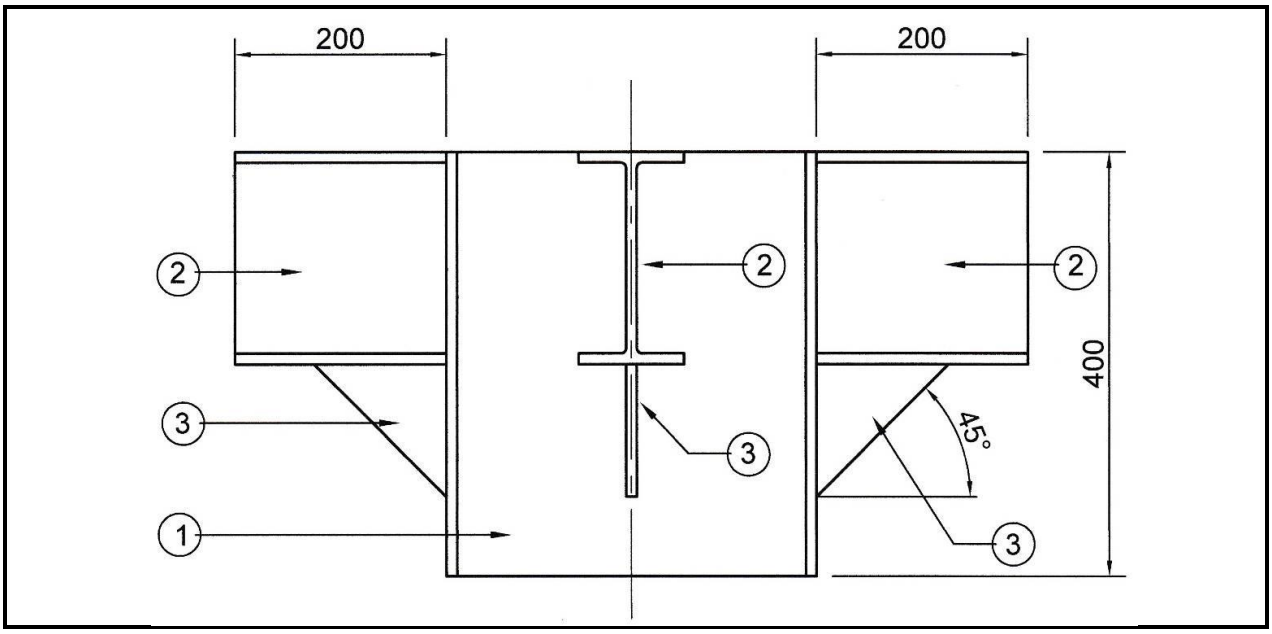

FIGURE 1

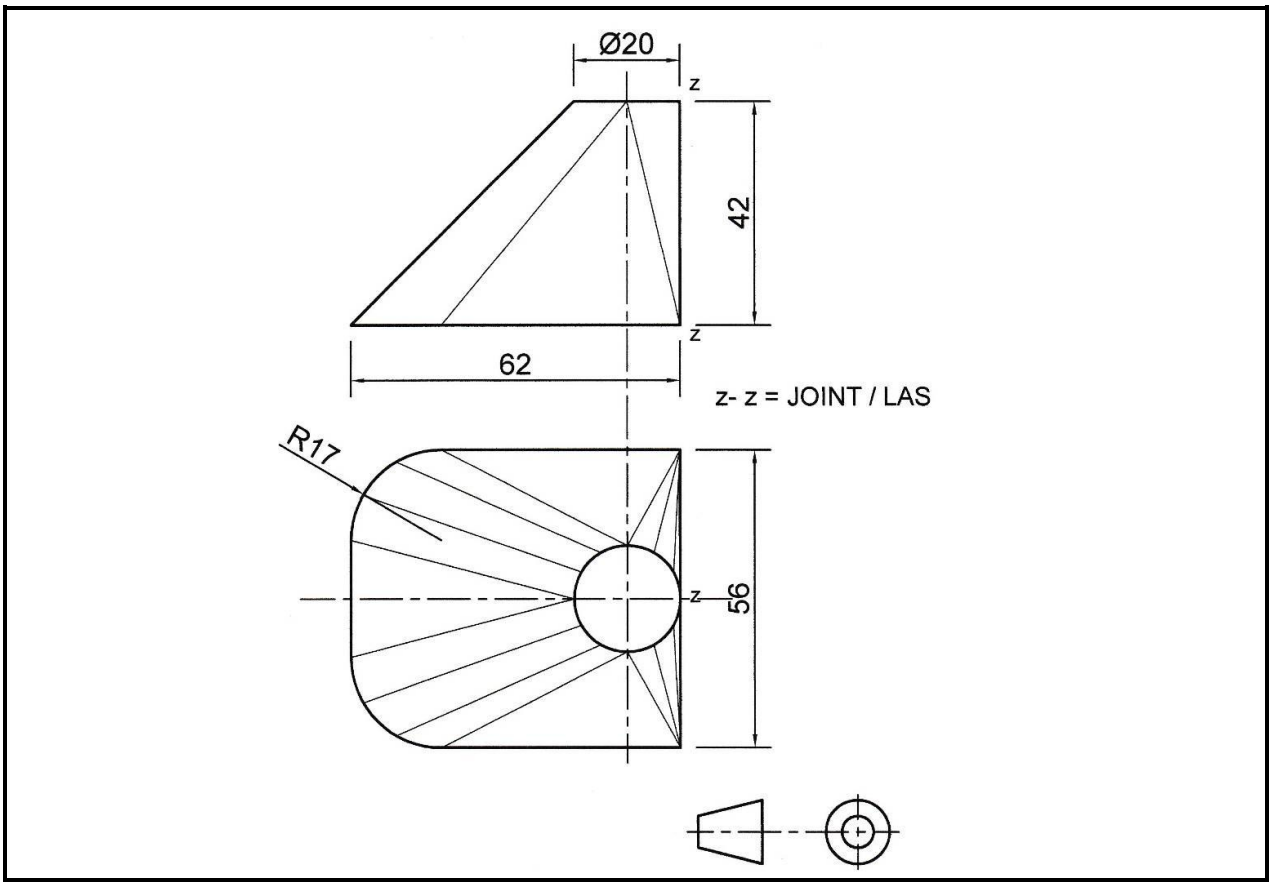

FIGURE 2

Copyright reserved

DIAGRAM SHEET 2

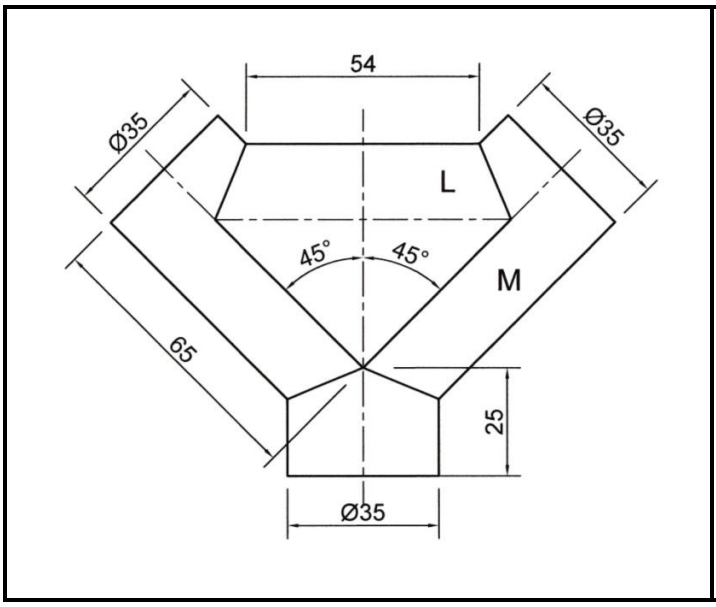

FIGURE 3

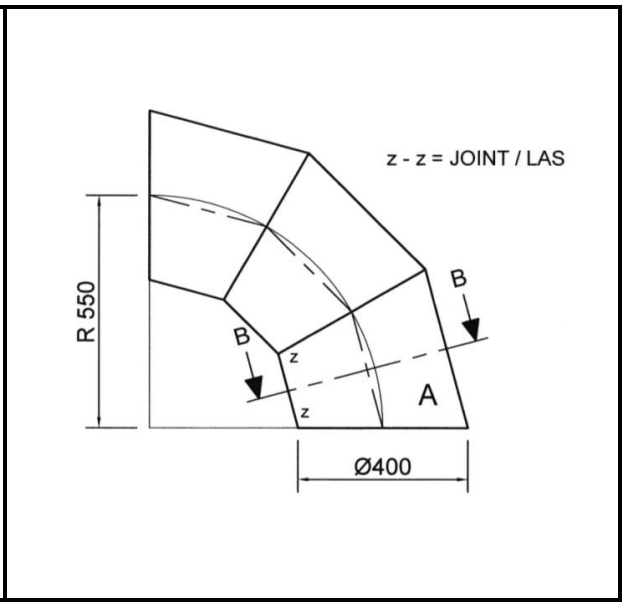

FIGURE 4

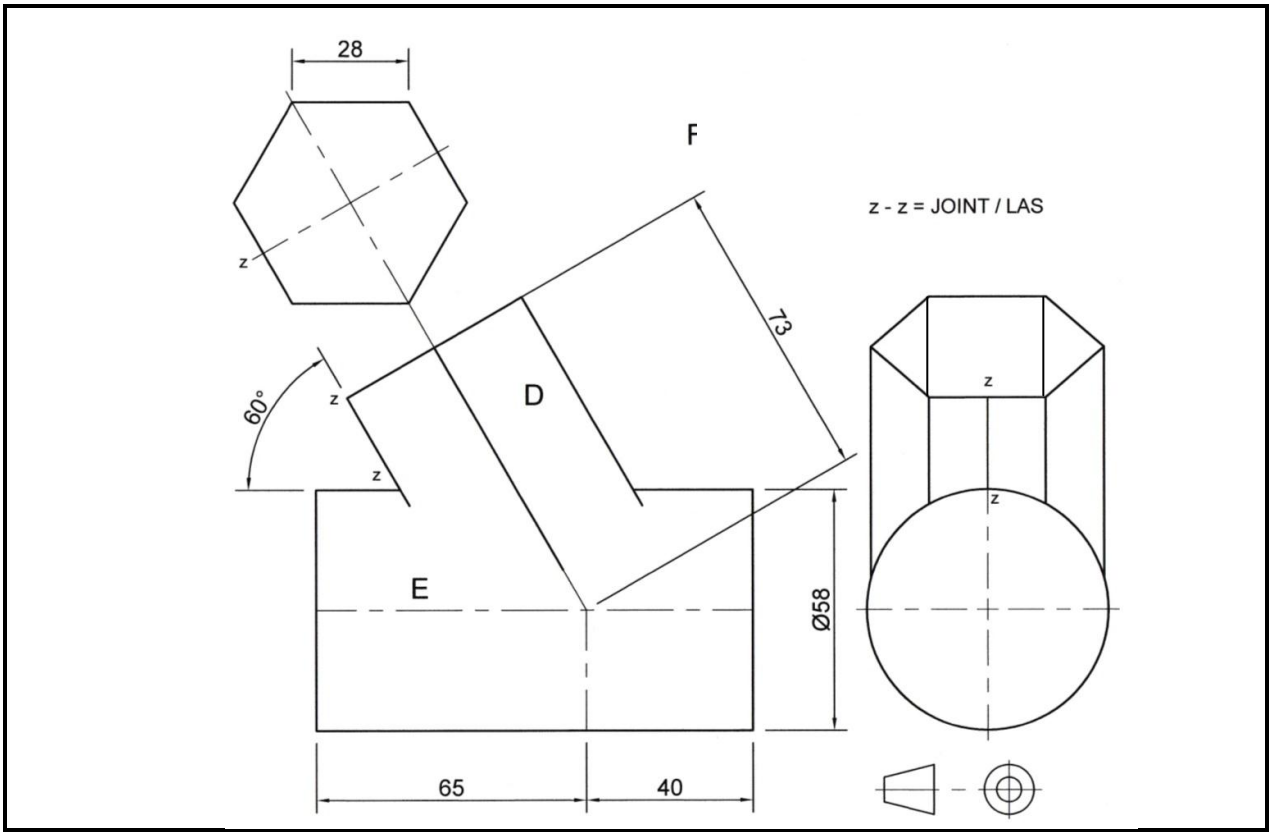

FIGURE 5

Copyright reserved