higher education & training

Department:
Higher Education and Training
REPUBLIC OF SOUTH AFRICA

T1340**(E)**(A10)T

NATIONAL CERTIFICATE

PLATING AND STRUCTURAL STEEL DRAWING N2

(8090102)

10 April 2018 (X-Paper)
09:00–13:00

REQUIREMENTS: **ONE sheet of A2 drawing paper**

Calculators may be used.

This question paper consists of 5 pages and 3 diagrams sheets.

Copyright reserved

DEPARTMENT OF HIGHER EDUCATION AND TRAINING
REPUBLIC OF SOUTH AFRICA

NATIONAL CERTIFICATE
PLATING AND STRUCTURAL STEEL DRAWING N2
TIME: 4 HOURS
MARKS: 100

NOTE: If you answer more than THREE questions in SECTION B, only the FIRST THREE questions in SECTION B will be marked. All work you do not want to be marked must be clearly crossed out.

INSTRUCTIONS AND INFORMATION

1. Answer question one in SECTION A and any THREE of the four questions in SECTION B.
2. Read ALL the questions carefully.
3. Do TWO questions on the FRONT and TWO questions on the REVERSE side of the DRAWING SHEET.
4. Number the answers according to the numbering system used in this question paper.
5. ALL the construction lines MUST be shown.
6. Add dimensions to the answers.
7. Write neatly and legibly.

Copyright reserved

SECTION A

QUESTION 1

FIGURE 1, DIAGRAM SHEET 1 (attached), shows the front view of a welded beam-to-beam connection. The two beams share a common centre line in the top view.

Draw in first-angle orthographic projection:

1.1 The given front view (4)

1.2 The left view (7)

1.3 The top view (7)

Mark allocation for drawing office practice for the above question is as follows:

Print the Title 'BEAM –BEAM-CONNECTION' centrally beneath the two views and Scale . (1)

Dimensions (2)

Line work (3)

Projection Symbol. (1)

SCALE 1:5

25

TOTAL SECTION A: [25]

Copyright reserved

SECTION B

Answer any THREE of the four questions in this section.

QUESTION 2

FIGURE 2, DIAGRAM SHEET 1 (attached), shows two views of a connection between a right cone and a square pipe.

2.1 Draw the two given views . (2)

2.2 Determine the penetration line. (6)

2.3 Develop the pattern of the right cone 'A'. (6)

2.3 Develop the shape of the hole in the square pipe 'B'. (6)

Mark allocation for drawing office practice for the above question is as follows:

Dimensions (2)

Line work (3)

SCALE 1:2

[25]

QUESTION 3

FIGURE 3, DIAGRAM SHEET 2 (attached), shows the front view and the top view of a rectangular-to-round chute. .

3.1 Draw the two given views . (3)

3.2 Develop the pattern of the plate for the chute. (17)

Mark allocation for drawing office practice for the above question is as follows:

Dimensions (2)

Line work (3)

SCALE 1:2

[25]

Copyright reserved

QUESTION 4

FIGURE 4, DIAGRAM SHEET 2 (attached), shows the front view and the top view of an oblique cylindrical hopper.

Draw the two views and develop the pattern for the hopper.

4.1 Draw the two given views . (2)

4.2 Develop the pattern for the hopper. (18)

Mark allocation for drawing office practice for the above question is as follows:

Dimensions (2)

Line work (3)

SCALE 1:1

[25]

QUESTION 5

FIGURE 5, DIAGRAM SHEET 3 (attached), shows a lobster back bend with a vertical inlet pipe.

5.1 Draw the given view . (4)

5.2 Determine the penetration line. (8)

5.3 Determine the pattern of the segment "S". (8)

Mark allocation for drawing office practice for the above question is as follows:

Dimensions (2)

Line work (3)

SCALE 1:1

[25]

TOTAL SECTION B: 75
GRAND TOTAL: 100

Copyright reserved

DIAGRAM SHEET 1

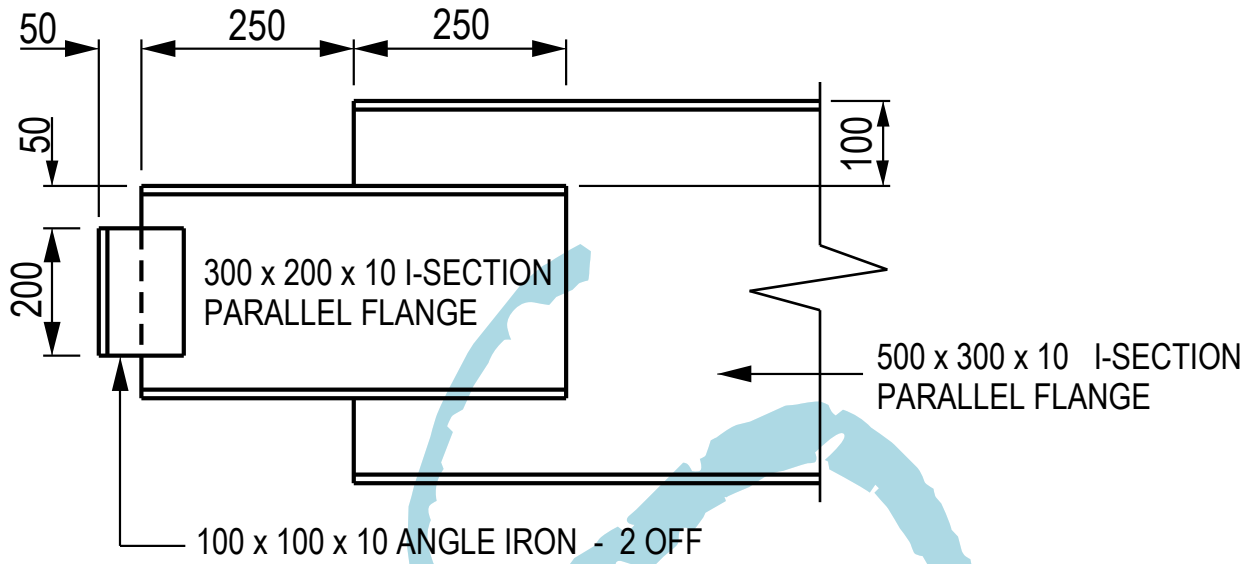

FIGURE 1

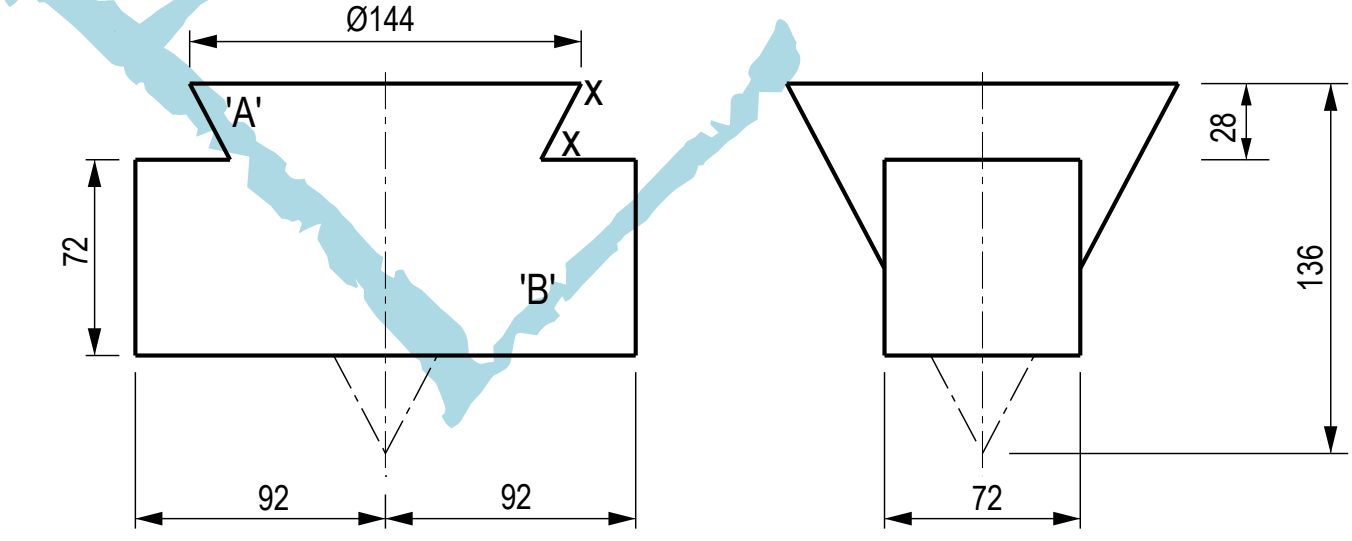

FIGURE 2

Copyright reserved

DIAGRAM SHEET 2

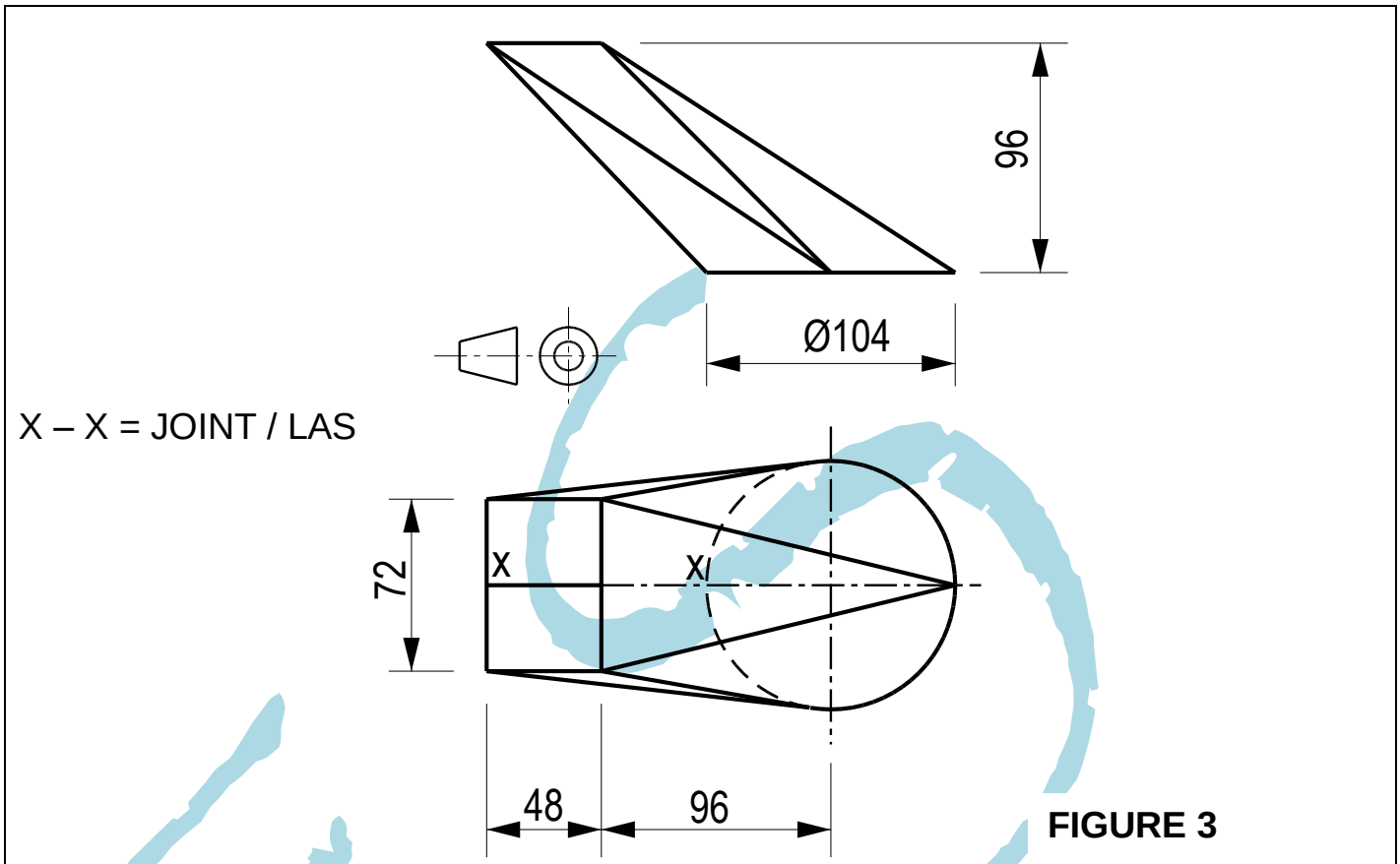

FIGURE 3

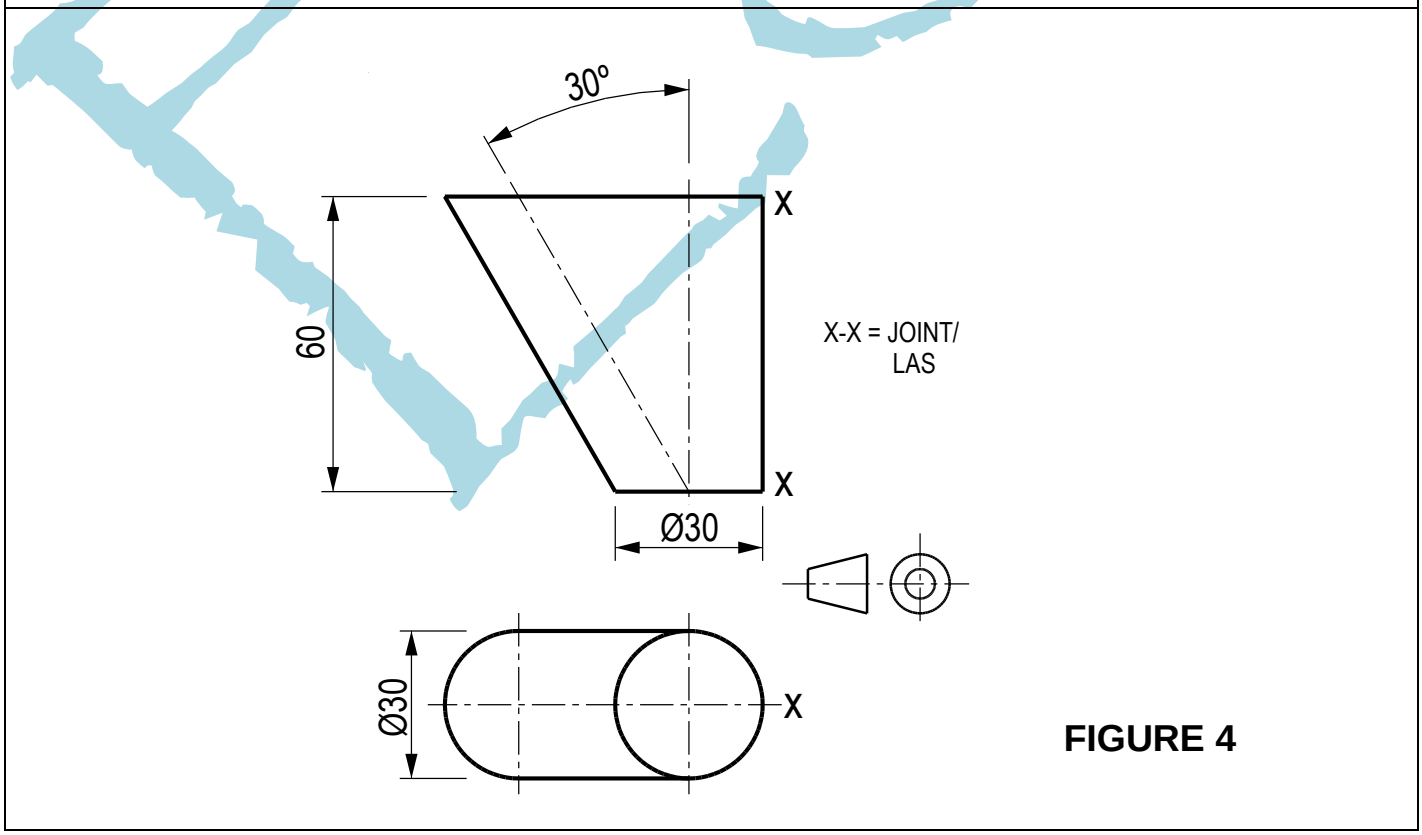

FIGURE 4

DIAGRAM SHEET 3

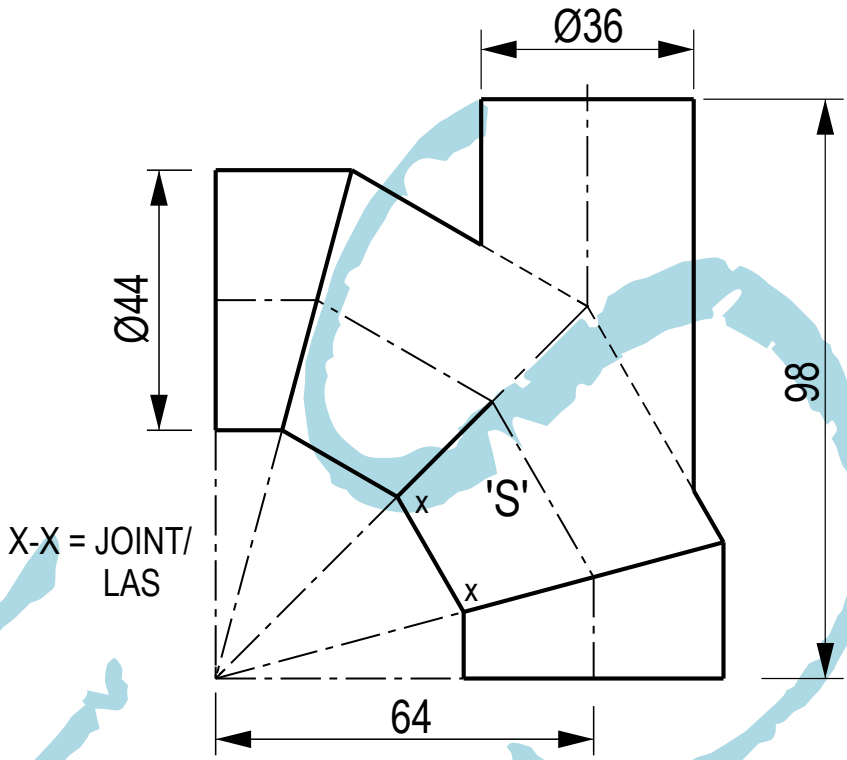

FIGURE 5

Copyright reserved