higher education & training

Department:
Higher Education and Training
REPUBLIC OF SOUTH AFRICA

MARKING GUIDELINE

NATIONAL CERTIFICATE

PLATING AND STRUCTURAL STEEL DRAWING N2

10 APRIL 2018

This marking guideline consists of 6 pages.

NOTE: ALL ANSWERS ARE NOT TO SCALE THEREFORE CANNOT BE USED AS A MARKING TOOL.

THE MEMORANDUMS ARE SCANNED IN AND ARE NOT IN AN EDITABLE FORMAT.

Copyright reserved

FRONT VIEW	4
LEFT VIEW	7
TOP VIEW	7
TITLE AND SCALE	1
PROJECTION SYMBOL	1
DIMENSIONS	2
LINEWORK	3
TOTAL	**25**

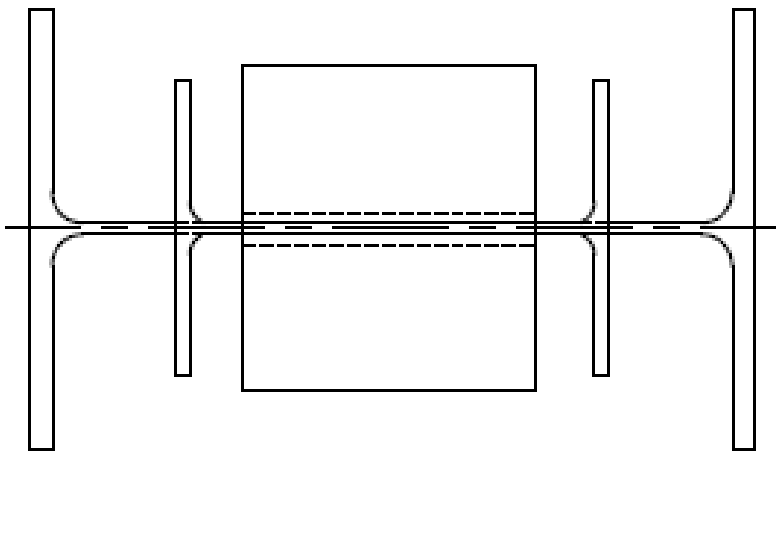

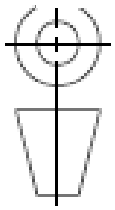

FIGURE 1

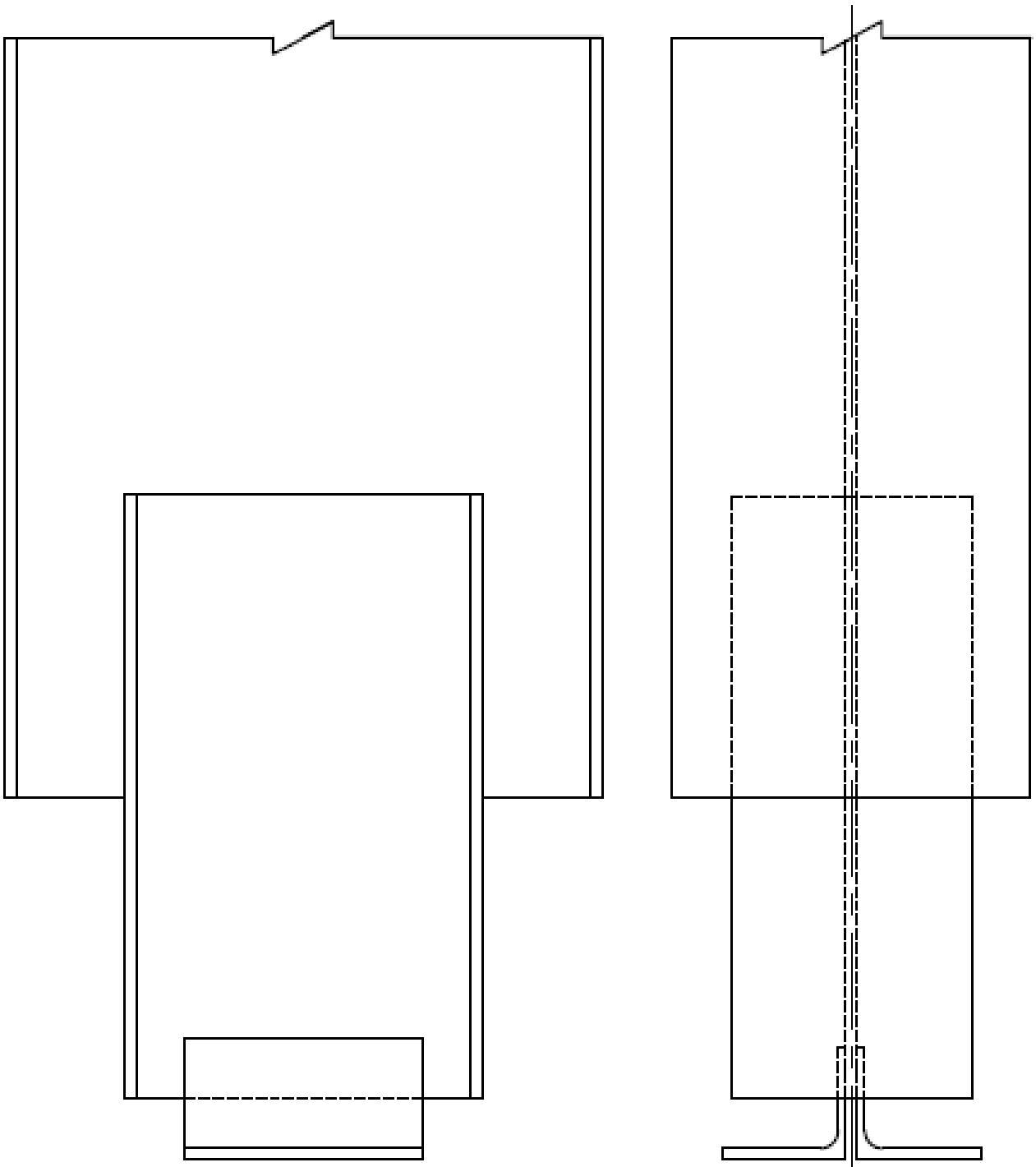

BEAM-TO-BEAM CONNECTION SCALE 1:5

Copyright reserved Please turn over

GIVEN VIEWS	2
PENETRATION LINE	6
PATTERN OF CONE	6
SHAPE OF HOLE	6
DIMENSIONS	2
LINE WORK	3
TOTAL	**25**

FIGURE 2

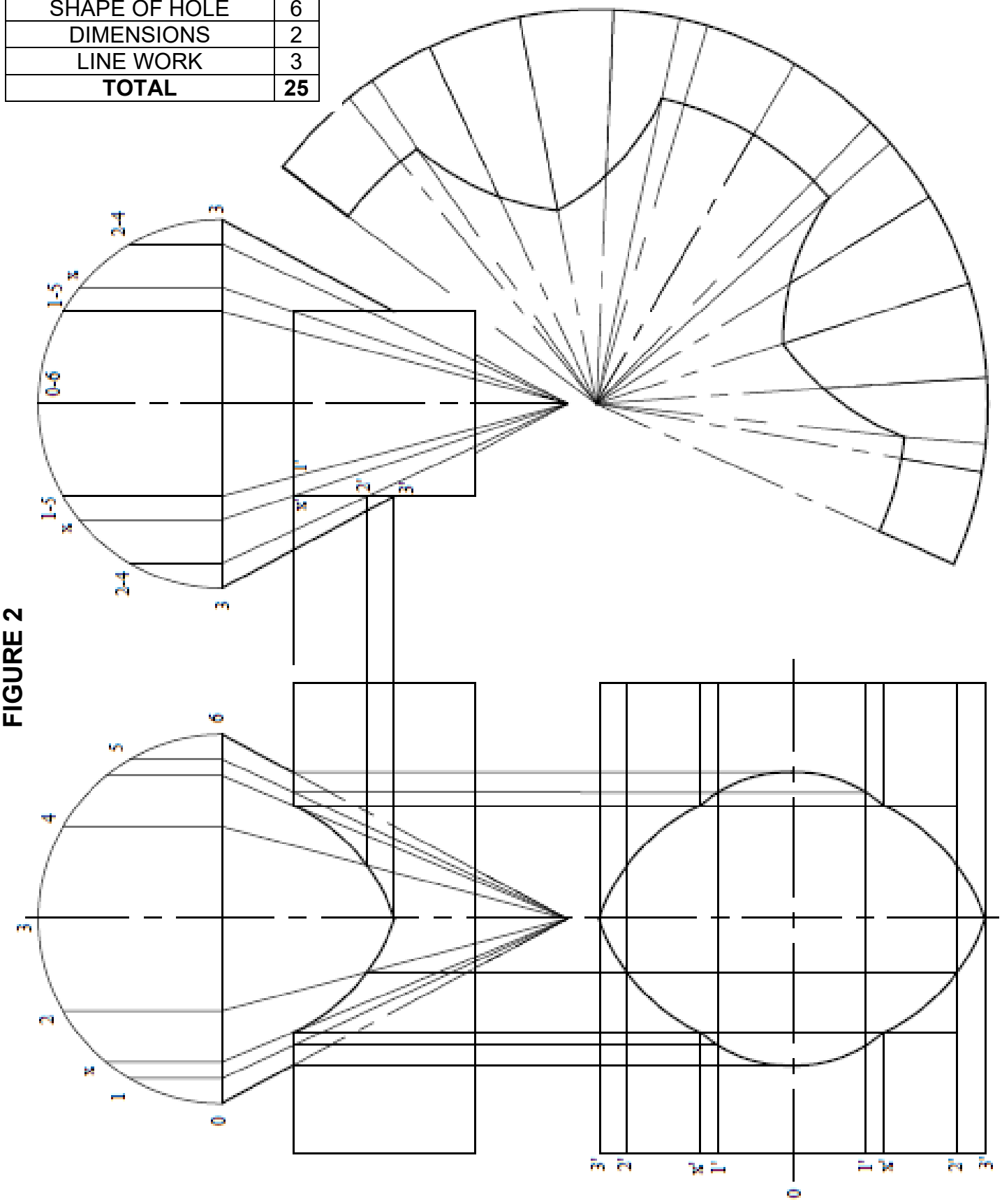

GIVEN VIEWS	3
PATTERN	17
DIMENSIONS	2
LINE WORK	3
TOTAL	**25**

FIGURE 3

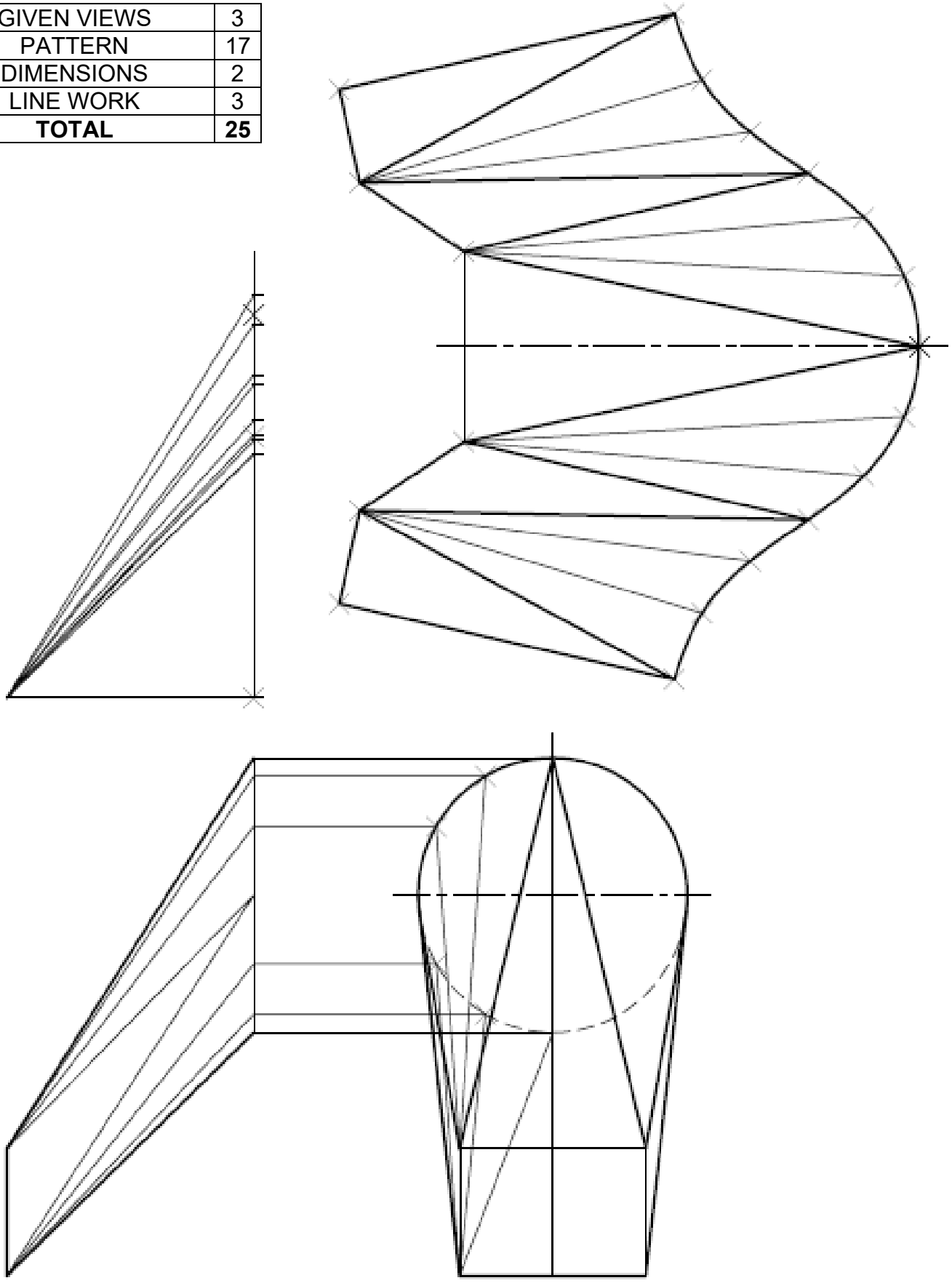

FRONT VIEW	1
TOP VIEW	1
PATTERN	18
DIMENSIONS	2
LINE WORK	3
TOTAL	**25**

FIGURE 4

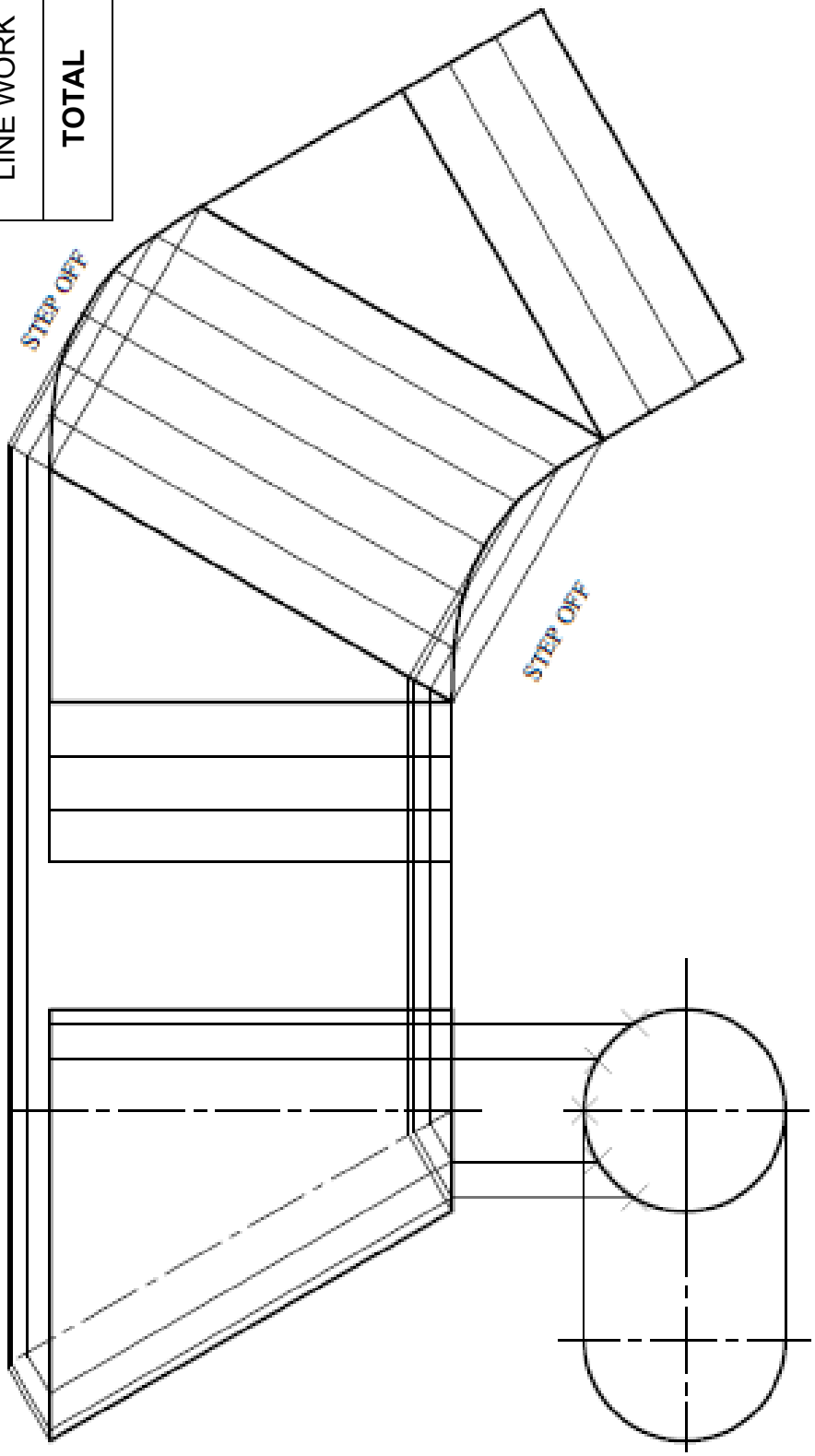

FIGURE 5

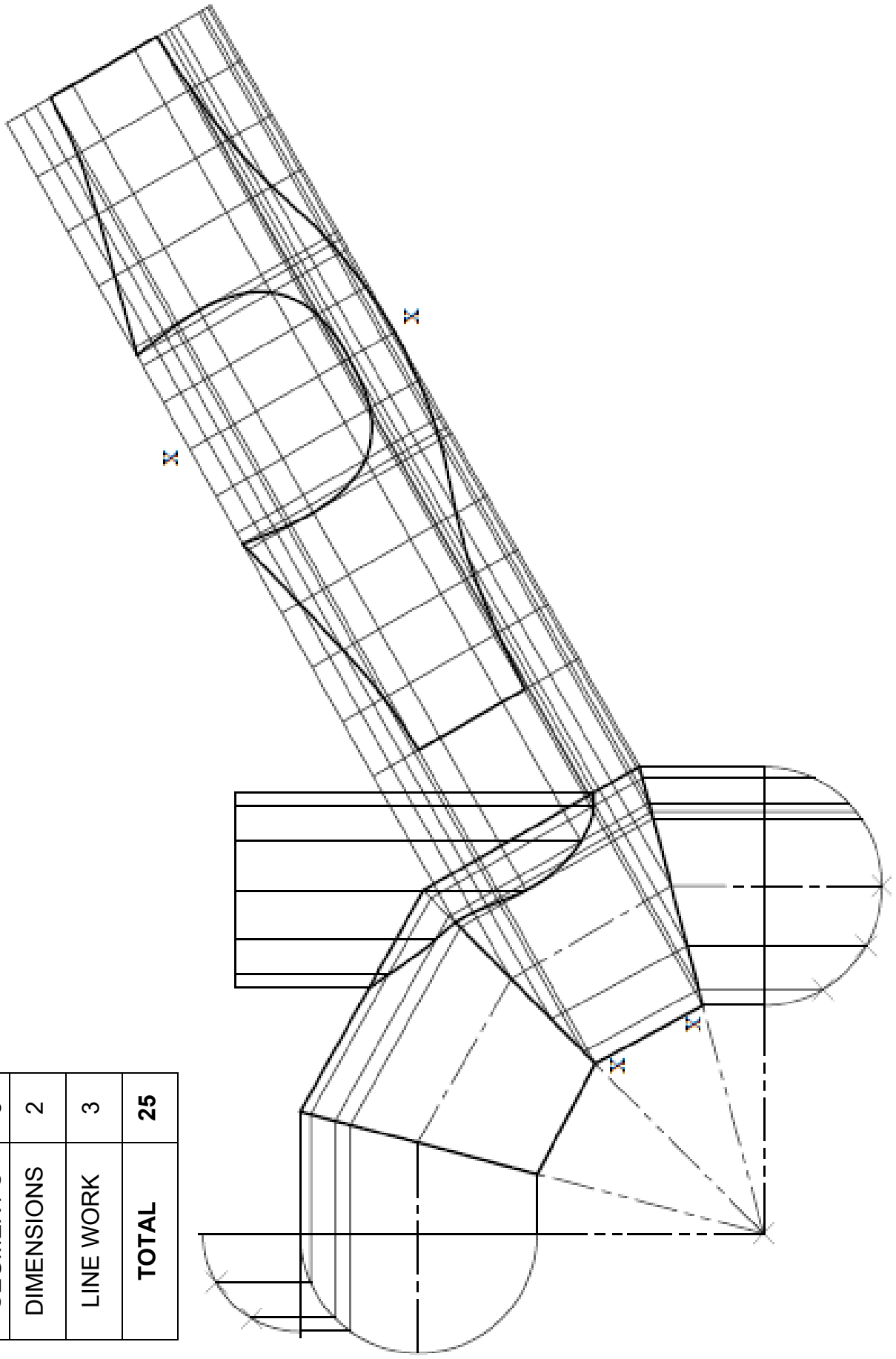

GIVEN VIEW	4
PENETRATION LINE	8
SEGMENT'S	8
DIMENSIONS	2
LINE WORK	3
TOTAL	**25**

Copyright reserved