higher education & training

Department:
Higher Education and Training
REPUBLIC OF SOUTH AFRICA

NATIONAL CERTIFICATE

PLATING AND STRUCTURAL STEEL DRAWING N1

(8090091)

18 November 2019 (X-Paper)
09:00–13:00

REQUIREMENTS: ONE A2 drawing sheet

This question paper consists of 5 pages and 2 diagram sheets.

Copyright reserved

DEPARTMENT OF HIGHER EDUCATION AND TRAINING
REPUBLIC OF SOUTH AFRICA

NATIONAL CERTIFICATE
PLATING AND STRUCTURAL STEEL DRAWING N1
TIME: 4 HOURS
MARKS: 100

INSTRUCTIONS AND INFORMATION

1. Answer ALL the questions.
2. Read ALL the questions carefully.
3. Number the answers according to the numbering system used in this question paper.
4. Show ALL construction lines.
5. Add ALL dimensions and descriptions unless stated otherwise.
6. Use only ONE DRAWING SHEET.
7. Draw on BOTH sides of the DRAWING SHEET.
8. Draw a 15 mm wide border line on BOTH sides of the DRAWING SHEET.
9. Marks will be allocated for neatness.
10. Work neatly.

Copyright reserved

QUESTION 1

FIGURE 1, DIAGRAM SHEET 1 (attached), shows the front view of a solid cone with a cut parallel to the right side of the cone as seen in the direction of arrow A. The cone will be used as a model in a drawing class at a university of technology.

Draw, to scale 1:1, the following views:

1.1 The given front view of the solid cone

1.2 The top view of the solid cone

1.3 The true shape of the cut as seen in the direction of arrow A

Show the correct projection symbol.

Clearly indicate the construction lines on the completed drawing. Print the following title and scale centred beneath the completed drawing:

SOLID CONE WITH PARALLEL CUT
SCALE 1:1

[15]

QUESTION 2

FIGURE 2, DIAGRAM SHEET 1 (attached), shows a 90 degree lobster-back bend. The lobster-back bend will be used in the ducting of a dust-extraction plant at a wooden-furniture factory.

Draw, to scale 1:10, the following views:

2.1 The given view of the lobster-back bend

2.2 The pattern of the plate to manufacture the segment marked A of the lobster-back bend – the joint of the pattern must be at X-X

Clearly indicate the construction lines on the completed drawing. Print the following title and scale centred beneath the completed drawing:

90 DEGREE LOBSTER-BACK BEND
SCALE 1:10

[20]

Copyright reserved

QUESTION 3

FIGURE 3, DIAGRAM SHEET 1 (attached), shows an oblique cone that will be used as part of the ducting in an air-conditioning plant of a huge shopping mall.

Draw, to scale 1:2, the following views:

3.1 The given view of the oblique cone

3.2 The pattern of the plate to manufacture the oblique cone – the joint of the pattern must be at X-X

Clearly indicate the construction lines on the completed drawing. Print the following title and scale centred beneath the completed drawing:

OBLIQUE CONE
SCALE 1:2 **[15]**

QUESTION 4

FIGURE 4, DIAGRAM SHEET 2 (attached), shows TWO views of a rectangle-to-rectangle transition piece. The transition piece will be used as an inlet chute to a small conveyor at a pet-food factory.

Draw, to scale 1:2, the following views:

4.1 The TWO given views of the transition piece

4.2 The pattern of the plate to make the transition piece – the joint of the pattern must be at X-X

Clearly indicate the construction lines on the completed drawing. Print the following title and scale centred beneath the completed drawing:

RECTANGLE-TO-RECTANGLE TRANSITION PIECE
SCALE 1:2 **[20]**

Copyright reserved

QUESTION 5

FIGURE 5, DIAGRAM SHEET 2 (attached), shows the intersection between a right pipe and a right cone by using the common central-sphere method. The intersection will be part of the piping of a huge oven at a brick-manufacturing company for the flow of hot air.

Draw, to scale 1:5, the following views:

5.1 The given view of the intersection between the right pipe and the right cone

5.2 The pattern of the plate to manufacture the right cone – the joint of the pattern must be at X-X

Clearly indicate the construction lines on the completed drawing. Print the following title and scale centred beneath the completed drawing:

CONE INTERSECTION
SCALE 1:5 **[15]**

QUESTION 6

FIGURE 6, DIAGRAM SHEET 2 (attached), shows two right pipes joined by an oblique pipe. The oblique pipe with the two right pipes will be used in the water-piping system of a large building.

Draw, to scale 1:5, the following views:

6.1 The given view of the oblique pipe with the right pipes

6.2 The pattern of the plate to manufacture the oblique pipe – the joint of the pattern must be at X-X

Clearly indicate the construction lines on the completed drawing. Print the following title and scale centred beneath the completed drawing:

OBLIQUE PIPE
SCALE 1:5 **[15]**

TOTAL: 100

Copyright reserved

DIAGRAM SHEET 1

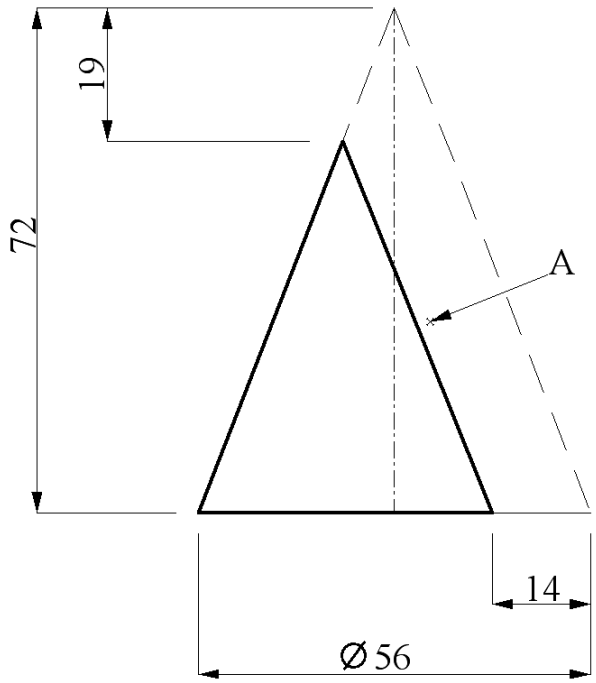

FIGURE 1

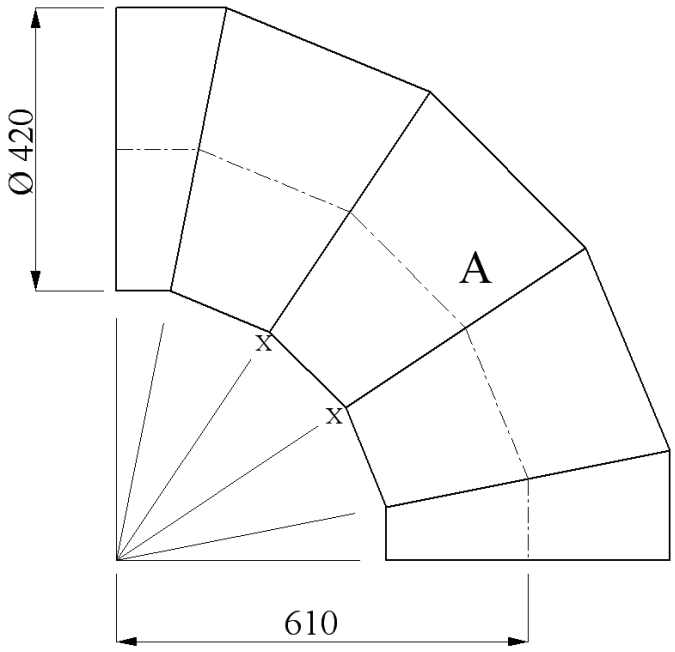

FIGURE 2

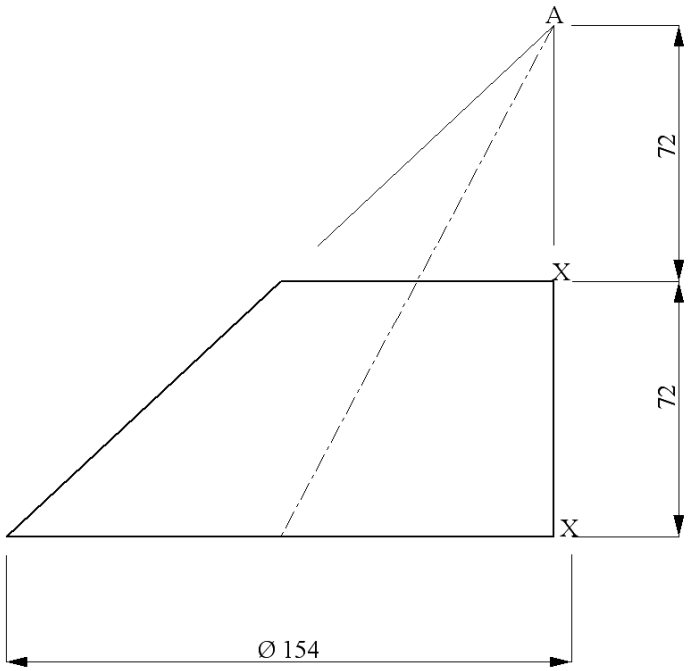

FIGURE 3

Copyright reserved

DIAGRAM SHEET 2

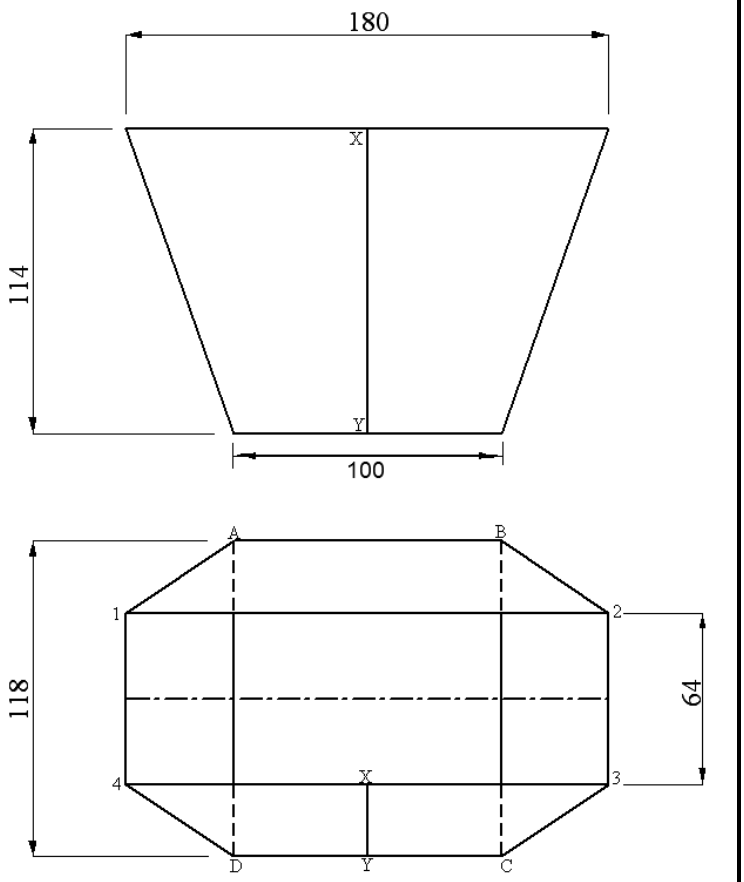

FIGURE 4

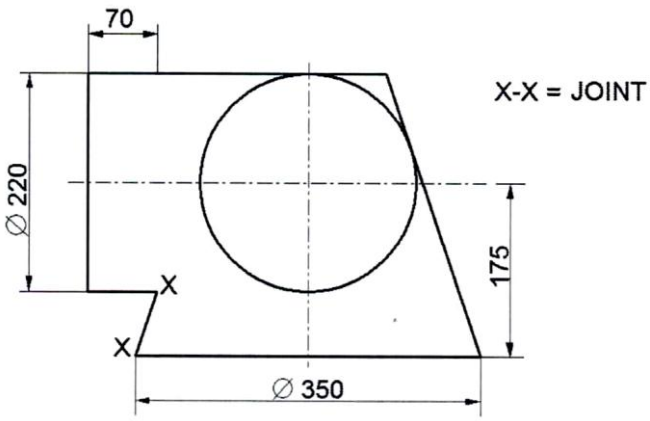

FIGURE 5

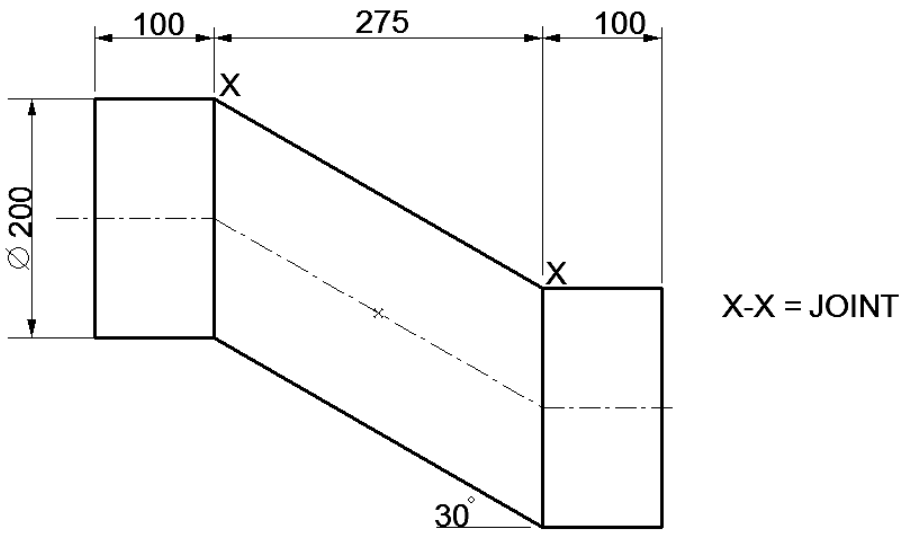

FIGURE 6

Copyright reserved