higher education & training

Department:
Higher Education and Training
REPUBLIC OF SOUTH AFRICA

NATIONAL CERTIFICATE

PLATING AND STRUCTURAL STEEL DRAWING N1

(8090091)

27 July 2021 (X-paper)
09:00–13:00

REQUIREMENTS: ONE A2 drawing sheet

Drawing instruments and nonprogrammable calculators may be used.

This question paper consists of 8 pages.

054Q1G2127

Copyright reserved

DEPARTMENT OF HIGHER EDUCATION AND TRAINING
REPUBLIC OF SOUTH AFRICA

NATIONAL CERTIFICATE
PLATING AND STRUCTURAL STEEL DRAWING N1
TIME: 4 HOURS
MARKS: 100

INSTRUCTIONS AND INFORMATION

1. Answer all the questions.
2. Read all the questions carefully.
3. Number the answers according to the numbering system used in this question paper.
4. Show all construction lines.
5. Add all the dimensions and descriptions, unless otherwise stated.
6. Use only ONE drawing sheet.
7. Draw on both sides of the drawing paper.
8. Draw a 15-mm border line on both sides of the drawing paper.
9. Marks will be allocated for neatness. Print neatly and legibly.

Copyright reserved

QUESTION 1

FIGURE 1 below shows the front view and an incomplete top view of a square pyramid with 45° and 30° cuts. The pyramid will be used as part of a mould at a factory fabricating concrete sections for the building and construction sector.

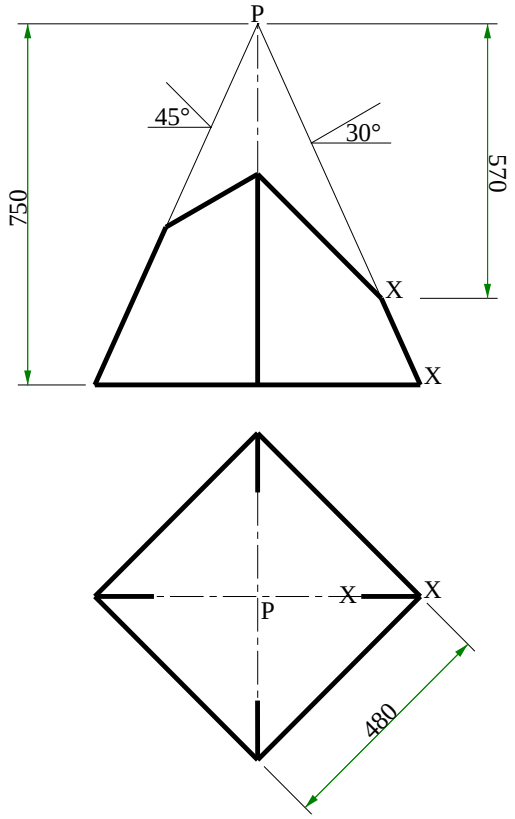

FIGURE 1

Draw the following views to scale 1:10.

1.1 The front view of the cone.

1.2 The completed top view of the cone.

1.3 The pattern of the plate to make the pyramid. The joint of the pyramid is at X-X.

The completed drawing must clearly indicate all the construction lines. Print the following title and scale centrally below the finished drawing:

SQUARE PYRAMID
SCALE 1:10 **[15]**

Copyright reserved

QUESTION 2

FIGURE 2 below shows the front view of a right Y-piece. The Y-piece will be used in the piping at a municipal sewerage plant.

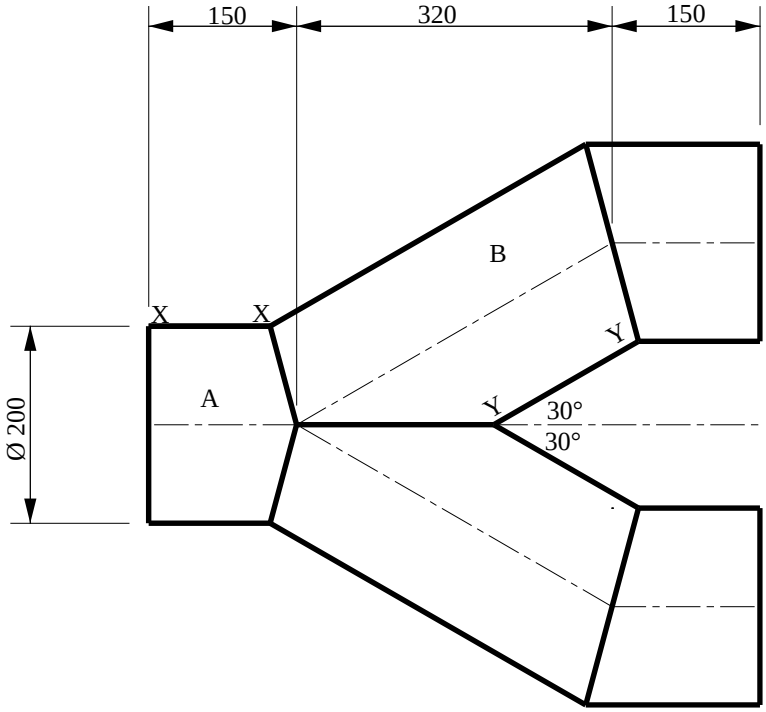

FIGURE 2

Draw the following views to scale 1:5.

2.1 The front view of the Y-piece.

2.2 The pattern of the plate to fabricate part A of the Y-piece. The joint of the part is at X-X.

2.3 The pattern of the plate to fabricate part B of the Y-piece. The joint of the part is at Y-Y.

The completed drawing must clearly indicate all the construction lines. Print the following title and scale centrally below the finished drawing:

RIGHT Y-PIECE
SCALE 1:5

[20]

Copyright reserved

QUESTION 3

FIGURE 3 below shows the front view of an intersection between a right pipe and a right cone. The intersection will be used as part of the stainless steel piping at a dairy.

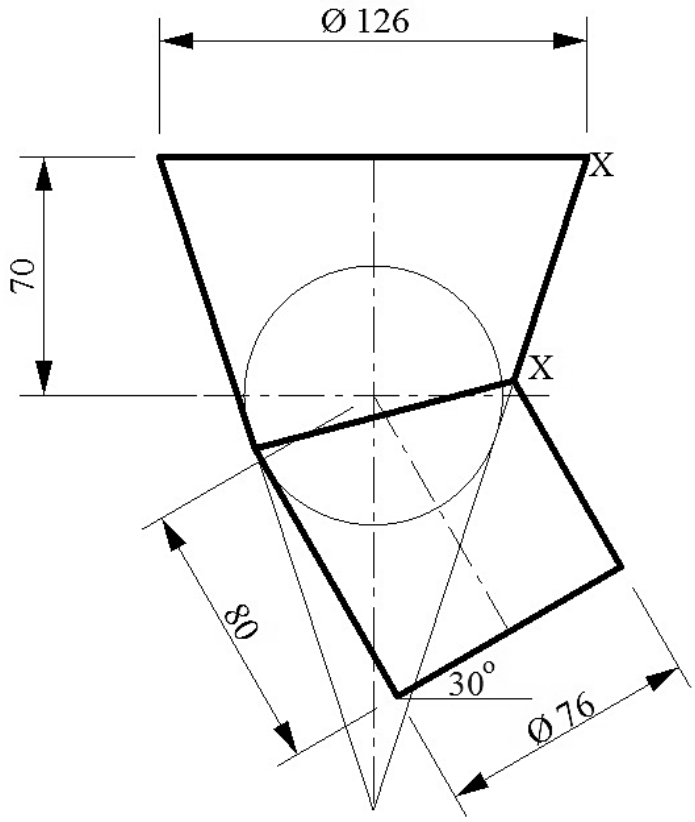

FIGURE 3

Draw the following views to scale 1:2.

3.1 The front view of the intersection.

3.2 The pattern of the plate to manufacture the right cone. The joint of the pattern is at X-X.

The completed drawing must clearly indicate all the construction lines. Print the following title and scale centrally below the finished drawing:

CONE INTERSECTION
SCALE 1:2

[15]

Copyright reserved

QUESTION 4

FIGURE 4 below shows the front view and incomplete top view of a solid rectangular pyramid with a cut across the body. The pyramid will be used as a model in the engineering fabrication class at a technical college.

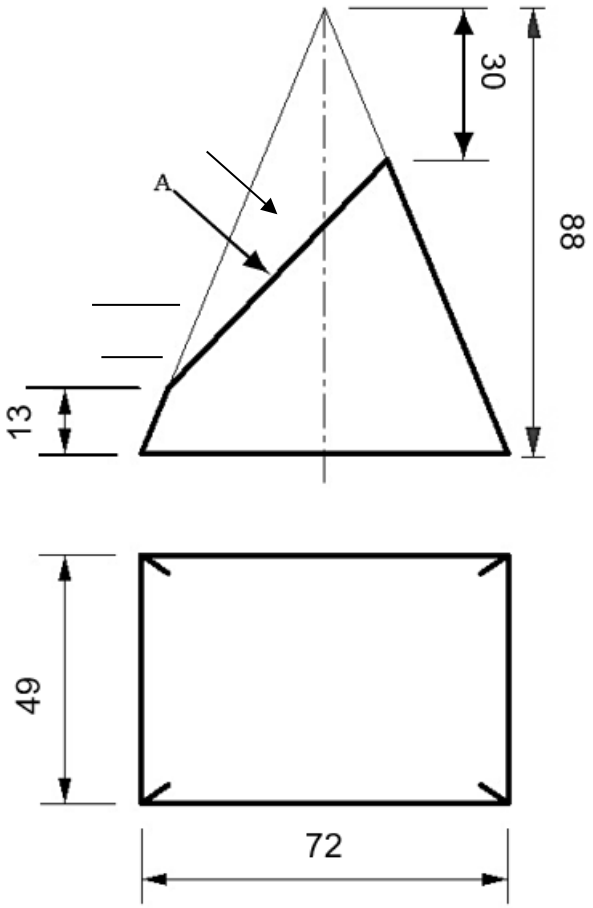

FIGURE 4

Draw the following views to scale 1:1.

4.1 The front view of the pyramid.

4.2 The completed top view of the pyramid.

4.3 The true shape of the cut as seen in the direction of arrow A.

Use the symbol to indicate the projection.

The completed drawing must clearly indicate all the construction lines. Print the following title and scale centrally below the finished drawing:

RECTANGULAR PYRAMID
SCALE 1:1

[15]

Copyright reserved

QUESTION 5

FIGURE 5 below shows a 45^0 lobster-back bend. The bend will be used as part of the piping in a pneumatic grain handling system in a silo.

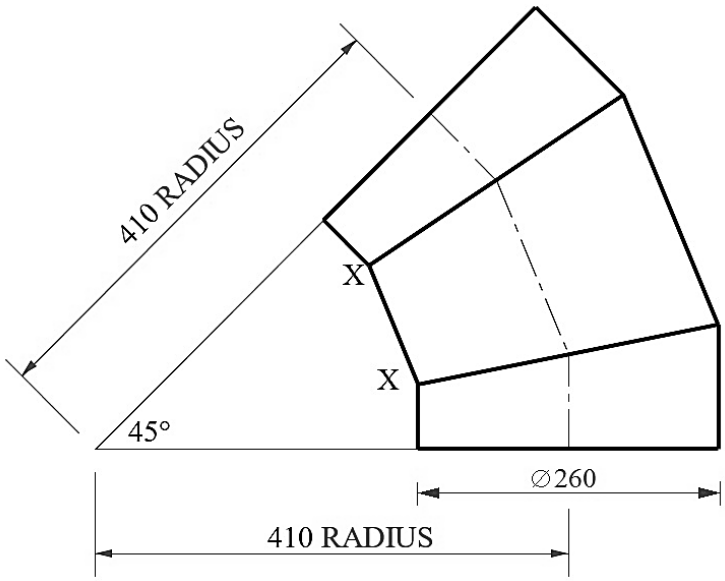

FIGURE 5

Draw the following views to scale 1:5.

5.1 The given view of the lobster-back bend.

5.2 The pattern of the middle segment of the lobster-back bend. The joint of the pattern is at X-X.

The completed drawing must clearly indicate all the construction lines. Print the following title and scale centrally below the finished drawing:

45^0 LOSTER-BACK BEND
SCALE 1:5 **[15]**

Copyright reserved

QUESTION 6

FIGURE 6 below shows the TWO views of a rectangle-to-round transition piece. The transition piece is part of the ducting in the ventilation system of the welding workshop of an engineering company.

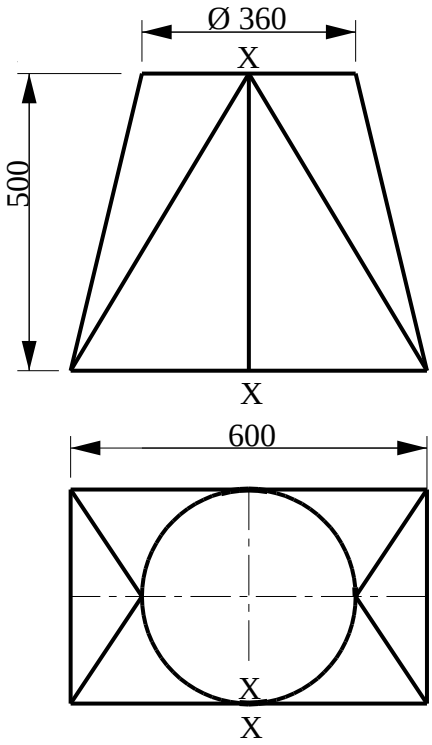

FIGURE 6

Draw the following views to scale 1:10.

6.1 The TWO given views of the rectangle-to-round.

6.2 The pattern of the plate to manufacture the rectangle-to-round. The joint of the pattern is at X-X.

The completed drawing must clearly indicate all the construction lines. Print the following title and scale centrally below the finished drawing:

RECTANGLE-TO-ROUND
SCALE 1:10

[20]

TOTAL: 100

Copyright reserved