higher education & training

Department:
Higher Education and Training
REPUBLIC OF SOUTH AFRICA

T1330**(E)**(J29)T

NATIONAL CERTIFICATE

PLATING AND STRUCTURAL STEEL DRAWING N1

(8090091)

29 July 2019 (X-Paper)
09:00–13:00

REQUIREMENTS: ONE A2 drawing sheet

Calculators may be used.

This question paper consists of 5 pages and 2 diagram sheets.

Copyright reserved

DEPARTMENT OF HIGHER EDUCATION AND TRAINING
REPUBLIC OF SOUTH AFRICA

NATIONAL CERTIFICATE
PLATING AND STRUCTURAL STEEL DRAWING N1
TIME: 4 HOURS
MARKS: 100

INSTRUCTIONS AND INFORMATION

1. Answer ALL the questions.
2. Read ALL questions carefully.
3. Number the answers according to the numbering system used in this question paper.
4. Show ALL construction lines.
5. Add ALL dimensions and descriptions unless stated otherwise.
6. Marks will be allocated for neatness.
7. Use only ONE DRAWING SHEET.
8. Draw on both sides of the DRAWING SHEET.
9. Draw a 15 mm wide border line on both sides of the DRAWING SHEET.
10. Work neatly.

Copyright reserved

QUESTION 1

FIGURE 1, DIAGRAM SHEET 1 (attached), shows an elbow formed by the intersection between a cylindrical pipe and a right cone. The common central sphere method is used to construct the elbow. The elbow will be used as an inlet to a milk tank in a dairy.

Draw, to scale 1:2, the following views:

1.1 The given view of the elbow

1.2 The line of penetration between the right pipe and the right cone

1.3 The pattern of the plate to manufacture the right cone – the joint of the pattern must be at X-X

Clearly indicate the construction lines on the completed drawing. Print the following title and scale centred beneath the completed drawing:

CONE-TO-PIPE ELBOW
SCALE 1:2 **[15]**

QUESTION 2

FIGURE 2, DIAGRAM SHEET 1 (attached), shows two oblique pipes joined to form an elbow. The elbow will be used as a nozzle in an industrial furnace.

Draw, to scale 1:1, the following views:

2.1 The given view of the oblique pipe elbow

2.2 The pattern of the plate to make pipe B of the elbow – the joint of the pattern must be at X-X

Clearly indicate the construction lines on the completed drawing. Print the following title and scale centred beneath the completed drawing:

OBLIQUE PIPE ELBOW
SCALE 1:1 **[15]**

Copyright reserved

QUESTION 3

FIGURE 3, DIAGRAM SHEET 1 (attached), shows two views of a rectangle-to-round transition piece. The transition piece will be fitted on a machine in a grain silo.

Draw, to scale 1:5, the following views:

3.1 The TWO given views of the transition piece

3.2 The pattern of the plate to make the transition piece – the joint of the pattern must be at X-Y

Clearly indicate ALL construction lines on the completed drawing. Print the following title and scale centred beneath the completed drawing:

RECTANGLE-TO-ROUND TRANSITION PIECE
SCALE 1:5

[20]

QUESTION 4

FIGURE 4, DIAGRAM SHEET 2 (attached), shows the front view of a solid pentagonal pyramid with a 30° cut and an incomplete top view drawn in first-angle orthographic projection. The pyramid will be used as a model in the training school for apprentices at a large engineering company.

Draw, to scale 1:1, the following views:

4.1 The given front view of the solid pentagonal pyramid

4.2 The complete top view of the solid pentagonal pyramid

4.3 The true shape of the cut in the direction of arrow A

Use the symbol to indicate the projection.

Clearly indicate ALL construction lines on the completed drawing. Print the following title and scale centred beneath the completed drawing:

PENTAGONAL PYRAMID
SCALE 1:1

[15]

Copyright reserved

QUESTION 5

FIGURE 5, DIAGRAM SHEET 2 (attached), shows two views of an oblique T-piece consisting of two equal-diameter right pipes. The T-piece is part of the piping in a fruit-juice processing plant.

Draw, to scale 1:2, the following views:

5.1 TWO given views of the T-piece

5.2 The line of penetration between the main pipe and the branch pipe in the front view

5.3 The pattern of the plate to manufacture the branch pipe – the joint of the branch pipe must be at X-X

5.4 The shape of the hole in the main pipe

Clearly indicate ALL construction lines on the completed drawing. Print the following title and scale centred beneath the completed drawing:

OBLIQUE T-PIECE
SCALE 1:2

[20]

QUESTION 6

FIGURE 6, DIAGRAM SHEET 2 (attached), shows the front view of an oblique cone. The oblique cone will be used on the piping in a water-distilling plant.

Draw, to scale 1:5, the following views:

6.1 The given view of the oblique cone

6.2 The pattern of the plate to make the oblique cone – the joint of the pattern must be at X-X

Clearly indicate ALL construction lines on the completed drawing. Print the following title and scale centred beneath the completed drawing:

OBLIQUE CONE
SCALE 1:1

[15]

TOTAL: 100

Copyright reserved

DIAGRAM SHEET 1

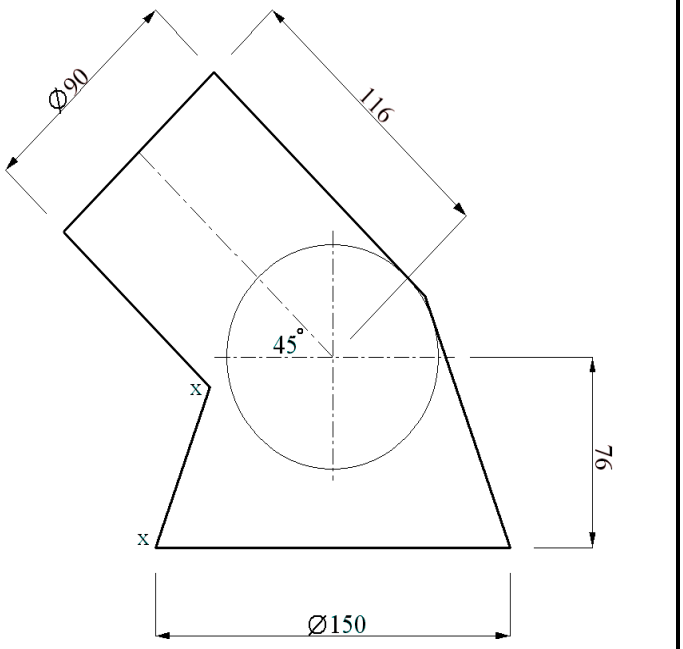

FIGURE 1

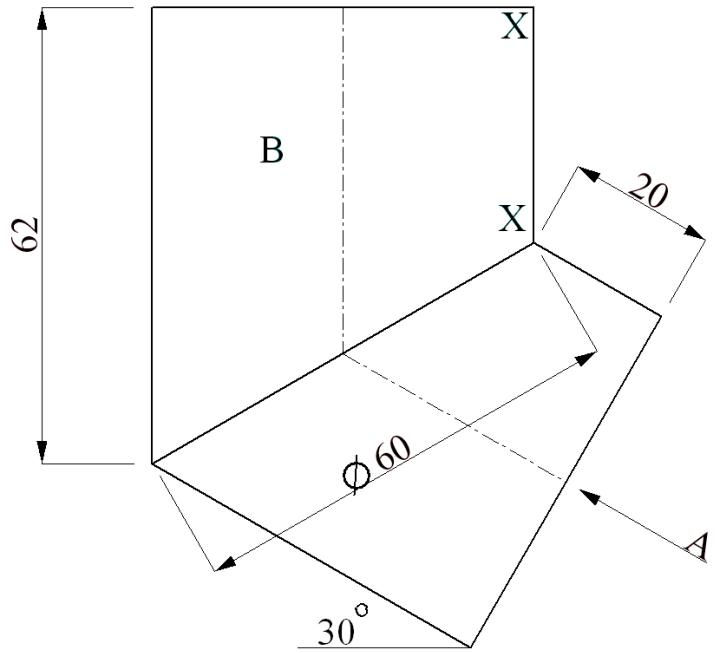

FIGURE 2

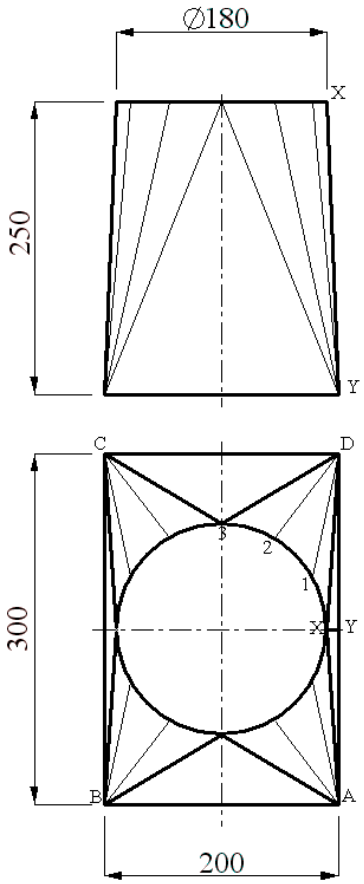

FIGURE 3

Copyright reserved

DIAGRAM SHEET 2

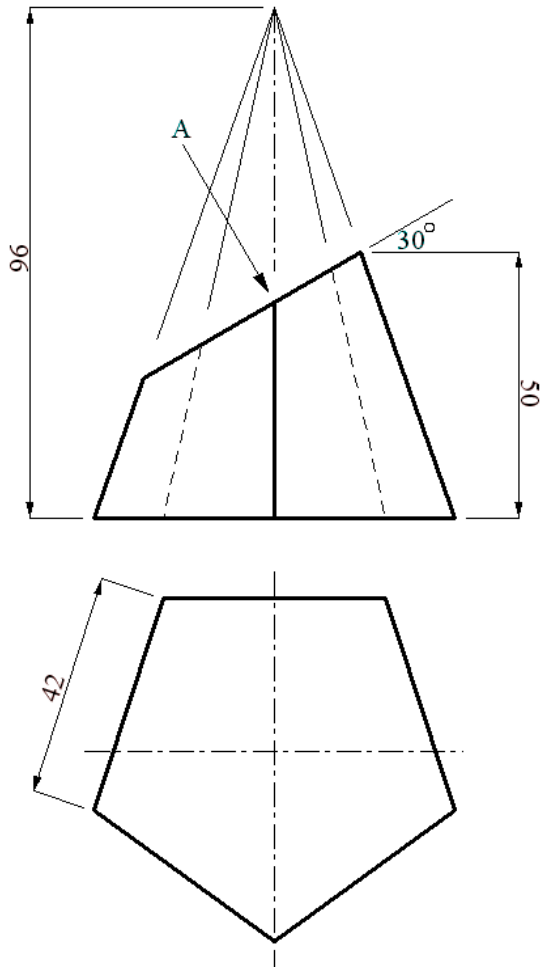

FIGURE 4

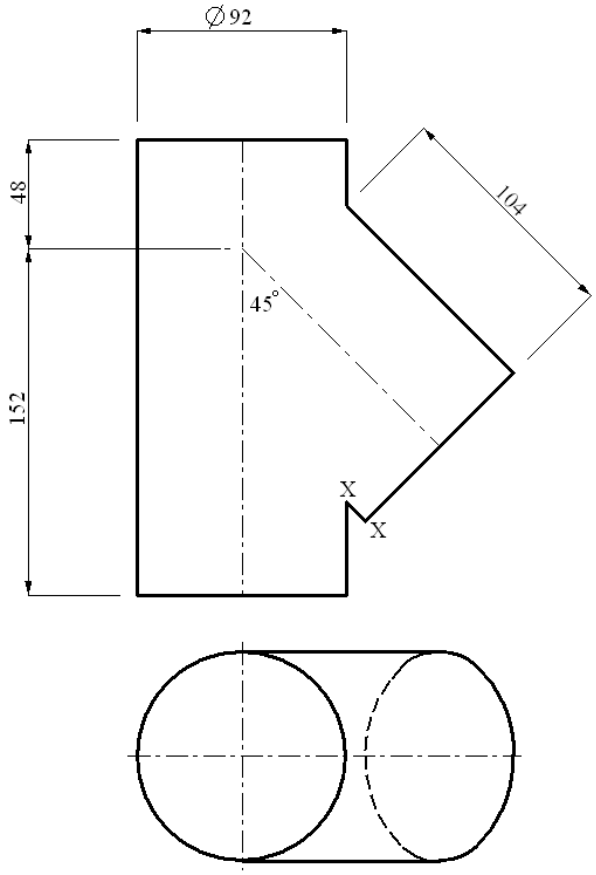

FIGURE 5

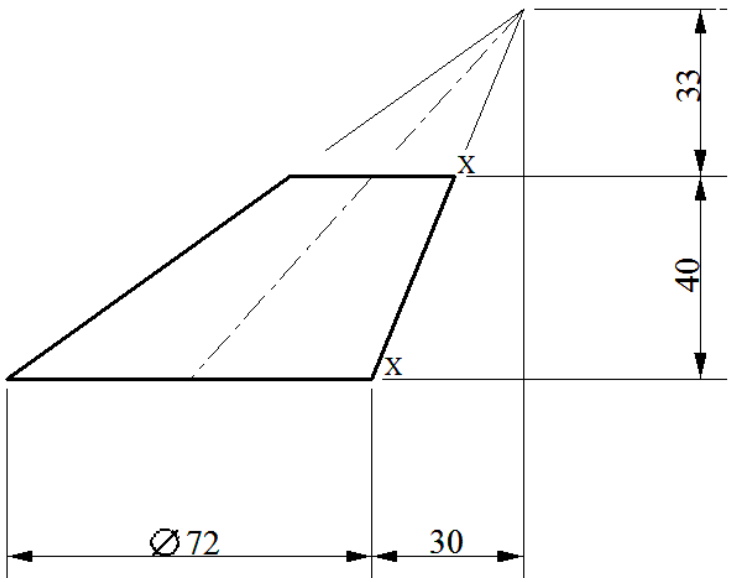

FIGURE 6

Copyright reserved