higher education & training

Department:
Higher Education and Training
REPUBLIC OF SOUTH AFRICA

# MARKING GUIDELINE

## NATIONAL CERTIFICATE

## PLATING AND STRUCTURAL STEEL DRAWING N1

**29 JULY 2019**

**This marking guideline consists of 9 pages.**

Copyright reserved

**MARKSHEET**

**QUESTION 1**

| | |
|---|---|
| Front view | 4 |
| Line of penetration | 2 |
| Pattern of the cone | 6 |
| Scale | 1 |
| Accuracy | 1 |
| Neatness | 1 |
| **TOTAL:** | **15** |

**QUESTION 2**

| | |
|---|---|
| Front view | 5 |
| Pattern of the oblique pipe | 7 |
| Scale | 1 |
| Accuracy | 1 |
| Neatness | 1 |
| **TOTAL:** | **15** |

**QUESTION 3**

| | |
|---|---|
| Front view | 2 |
| Top view | 3 |
| Pattern of the transition piece | 12 |
| Scale | 1 |
| Accuracy | 1 |
| Neatness | 1 |
| **TOTAL:** | **20** |

**QUESTION 4**

| | |
|---|---|
| Front view | 3 |
| Complete top view | 4 |
| True view on arrow A | 4 |
| Symbol | 1 |
| Scale | 1 |
| Accuracy | 1 |
| Neatness | 1 |
| **TOTAL:** | **15** |

Copyright reserved 

**QUESTION 5**

| | |
|---|---|
| Front view without line of penetration | 2 |
| Top view | 3 |
| Line of penetration | 2 |
| Pattern of the branch piece | 7 |
| Shape of the hole in the main pipe | 3 |
| Scale | 1 |
| Accuracy | 1 |
| Neatness | 1 |
| **TOTAL:** | **20** |

**QUESTION 6**

| | |
|---|---|
| Front view | 3 |
| Pattern of the transition piece | 9 |
| Scale | 1 |
| Accuracy | 1 |
| Neatness | 1 |
| **TOTAL:** | **15** |

Copyright reserved 

**QUESTION 1**

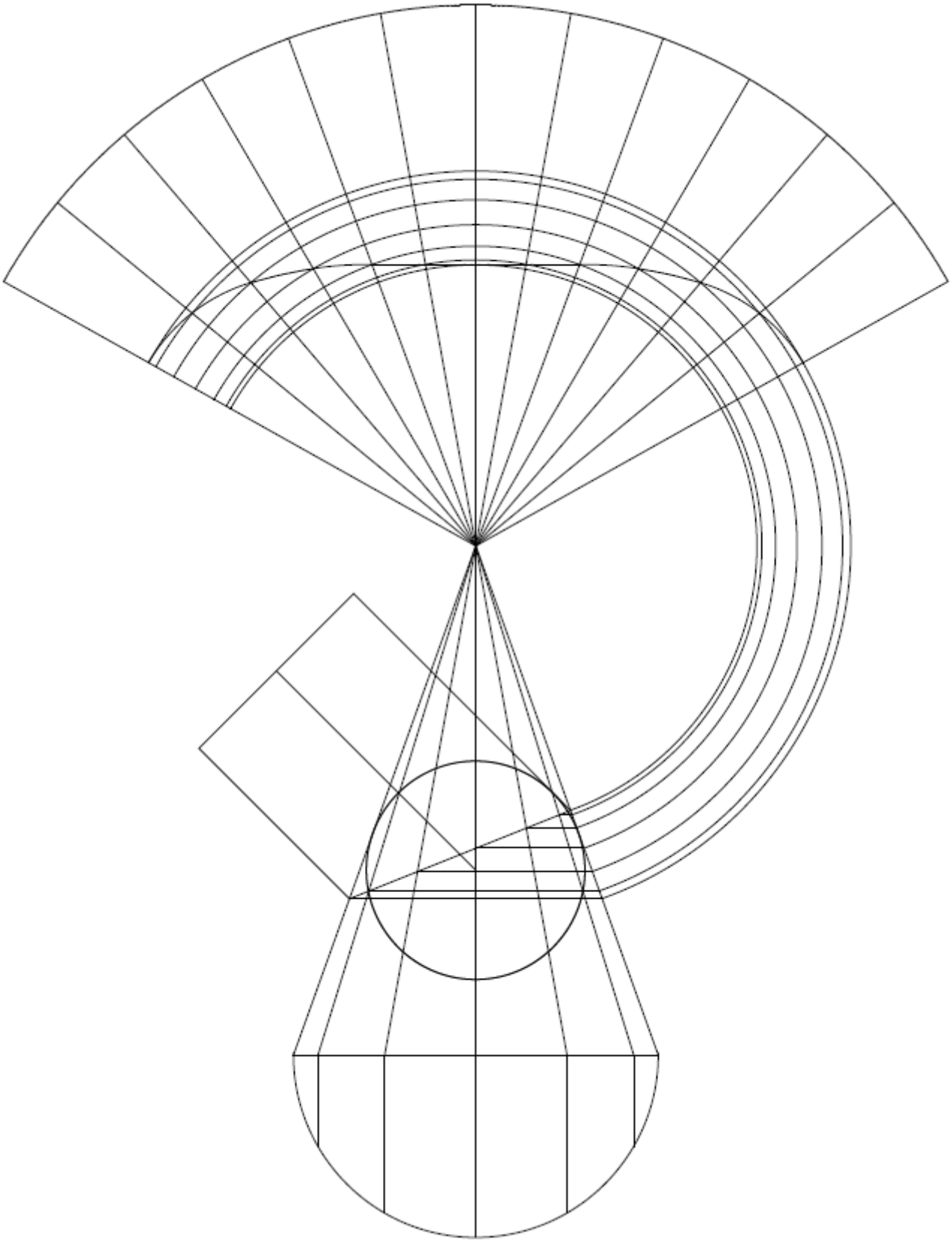

**CONE-TO-PIPE ELBOW**
**SCALE 1:2** **[15]**

**QUESTION 2**

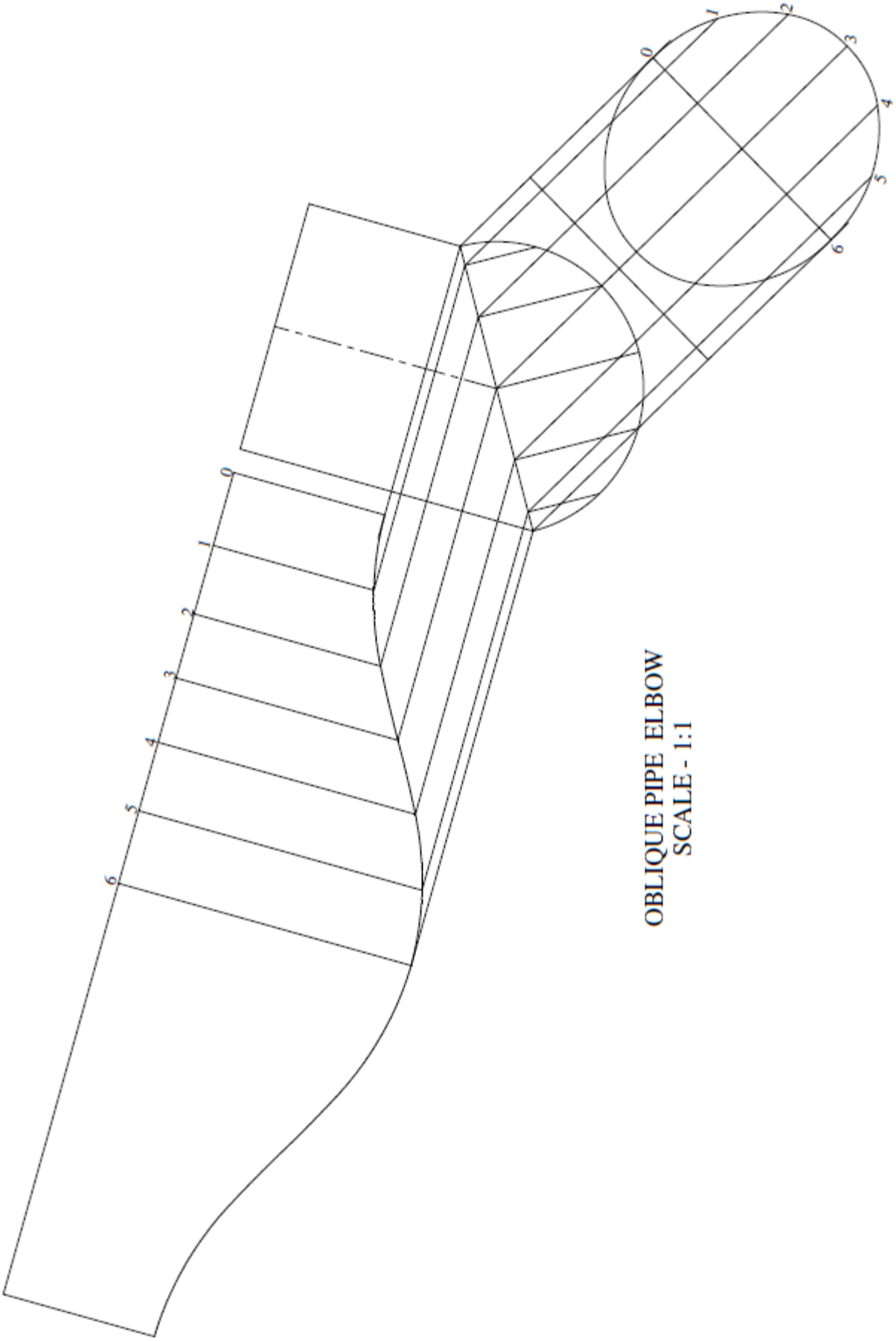


**[15]**

**QUESTION 3**

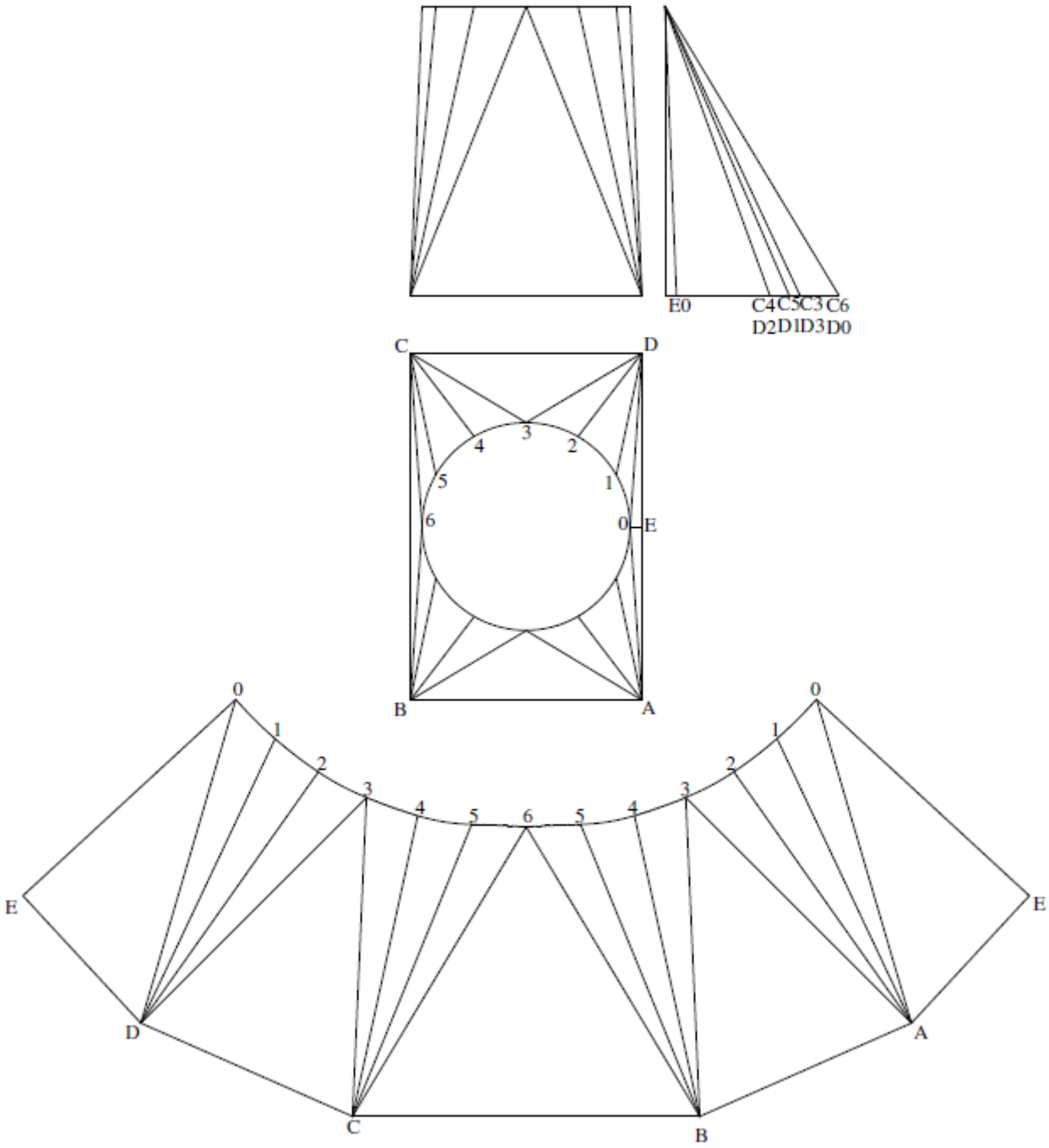


**RECTANGLE-TO-ROUND TRANSITION PIECE**
**SCALE 1:5** **[20]**

## QUESTION 4

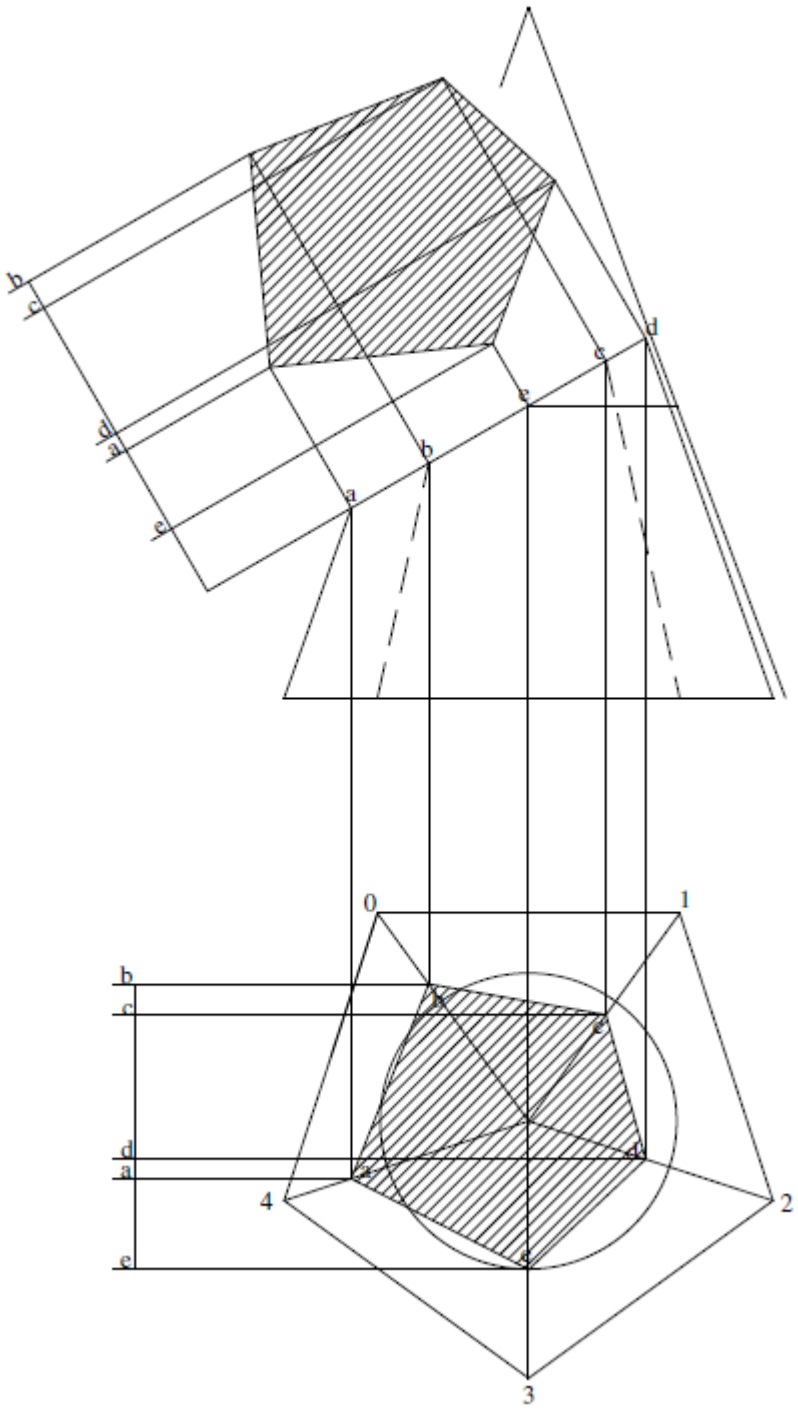


**PENTAGONAL PYRAMID**
**SCALE 1:1** **[15]**

## QUESTION 5

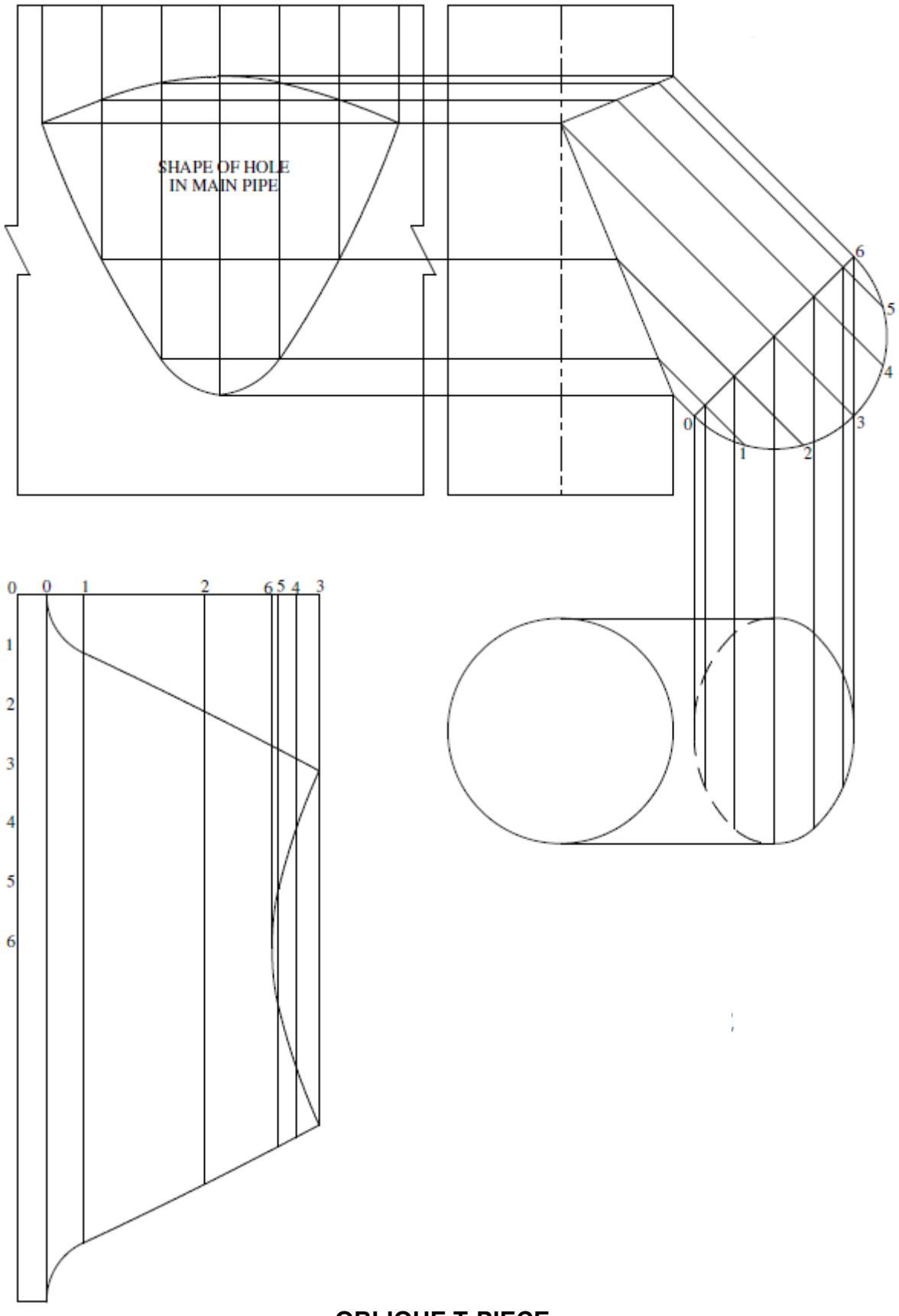


**OBLIQUE T-PIECE**
**SCALE 1:2** **[20]**

**QUESTION 6**

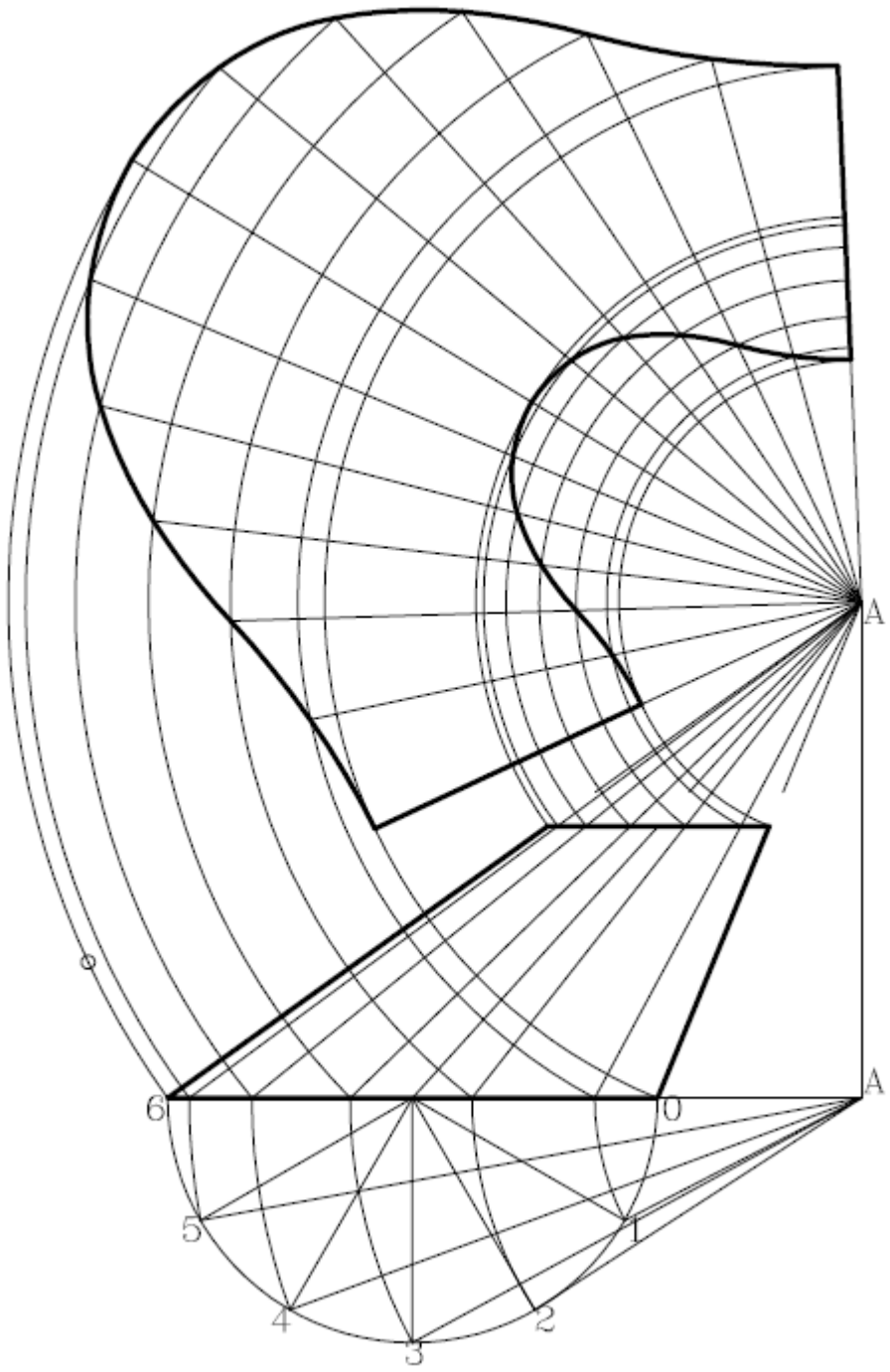


**OBLIQUE CONE**
**SCALE 1:1** **[15]**

**TOTAL: 100**

Copyright reserved