higher education & training

Department:
Higher Education and Training
REPUBLIC OF SOUTH AFRICA

T1330**(E)**(J25)T

# NATIONAL CERTIFICATE

# PLATING AND STRUCTURAL STEEL DRAWING N1

(8090091)

**25 July 2018 (X-Paper)**
**09:00–13:00**

**REQUIREMENTS: A2 drawing sheet**

**Calculators may be used.**

**This question paper consists of 5 pages and 2 diagram sheets.**

Copyright reserved

# DEPARTMENT OF HIGHER EDUCATION AND TRAINING
# REPUBLIC OF SOUTH AFRICA

NATIONAL CERTIFICATE
PLATING AND STRUCTURAL STEEL DRAWING N1
TIME: 4 HOURS
MARKS: 100

---

**INSTRUCTIONS AND INFORMATION**

1. Answer ALL the questions.
2. Read ALL the questions carefully.
3. Number the answers according to the numbering system used in this question paper.
4. Show ALL construction lines.
5. Add ALL dimensions and descriptions unless otherwise stated.
6. Only ONE DRAWING SHEET may be used.
7. Draw on both sides of the DRAWING SHEET.
8. Draw a 15 mm-wide border line on both sides of the DRAWING SHEET.
9. Print neatly and legibly.

---

Copyright reserved 

## QUESTION 1

FIGURE 1, DIAGRAM SHEET 1 (attached), shows a front and incomplete top view of a truncated square pyramid made from stainless steel. The pyramid will be used as an inlet hopper to a screw conveyor in a pharmaceutical company manufacturing various pills and capsules.

Draw, to scale 1 : 2, the following views:

1.1 The TWO given views of the pyramid

1.2 The completed top view of the pyramid

1.3 Using the radial line method, the pattern of the plate to manufacture the truncated square pyramid with the joint of the pattern at X–X

ALL construction lines must be clearly indicated on the completed drawing. Print the following title and scale centred below the completed drawing:

RIGHT PYRAMID
SCALE 1 : 2 **[15]**

## QUESTION 2

FIGURE 2, DIAGRAM SHEET 1 (attached), shows two views of a square-to-round transition piece. The square-to-round will be used to connect a round pipe to the square outlet of a fan in a dust-extraction plant.

Draw, to scale 1 : 10, the following views:

2.1 The given views of the transition piece

2.2 The pattern of the plate to manufacture the square-to-round with the joint of the pattern at X–X

ALL construction lines must be clearly indicated on the completed drawing. Print the following title and scale centred below the completed drawing:

SQUARE-TO-ROUND
SCALE 1 : 10 **[20]**

Copyright reserved 

## QUESTION 3

FIGURE 3, DIAGRAM SHEET 1 (attached), shows the front and top views of a solid cone with a parallel cut to the left of the centre line in first-angle orthographic projection. The solid cone will be used as a model for drawing classes at a technical high school.

Draw, to scale 1 : 1, the following views:

3.1 The front view of the solid cone

3.2 The top view of the solid cone

3.3 The true shape of the cut as shown in the direction of arrow A

Use the correct symbol to indicate the projection.

ALL construction lines must be clearly indicated on the completed drawing. Print the following title and scale centred below the completed drawing:

CONE
SCALE 1 : 1 **[15]**

## QUESTION 4

FIGURE 4, DIAGRAM SHEET 2 (attached), shows two views of a 205 mm square pipe cut at the bottom end and middle section. The pipe will be used as part of a support structure in an architectural design feature at the main entrance to a huge building.

Draw, to scale 1 : 5, the following views:

4.1 The given views of the square pipe

4.2 The pattern of the plate to manufacture the square pipe with the joint of the pattern at X–X

ALL construction lines must be clearly indicated on the completed drawing. Print the following title and scale centred below the completed drawing:

SQUARE PIPE
SCALE 1 : 5 **[15]**

Copyright reserved 

## QUESTION 5

FIGURE 5, DIAGRAM SHEET 2 (attached), shows a fitting consisting of a right pipe intersected by a conical branch. The fitting is made from stainless steel and is part of the piping in a fruit juice-processing plant.

Draw, to scale 1 : 1, the following views:

5.1 The given view of the fitting

5.2 The construction of the line of penetration between the right pipe and the conical branch

5.3 The pattern of the plate to manufacture the conical branch with the joint of the pattern at X–X

5.4 The shape of the hole in the right pipe

ALL construction lines must be clearly indicated on the completed drawing. Print the following title and scale centred below the completed drawing:

CONE INTERSECTION
SCALE 1 : 1 **[20]**

## QUESTION 6

FIGURE 6, DIAGRAM SHEET 2 (attached), shows a front view of two right pipes joined by an oblique pipe. The oblique pipe and the two right pipes are part of the ducting of an air-conditioning plant in a shopping mall.

Draw, to scale 1 : 10, the following views:

6.1 The given front view of the oblique pipe with TWO right pipes

6.2 The pattern of the plate to manufacture the oblique pipe with the joint of the pattern at X–X

ALL construction lines must be clearly indicated on the completed drawing. Print the following title and scale centred below the completed drawing:

OBLIQUE PIPE
SCALE 1 : 10 **[15]**

**TOTAL: 100**

Copyright reserved

## DIAGRAM SHEET 1

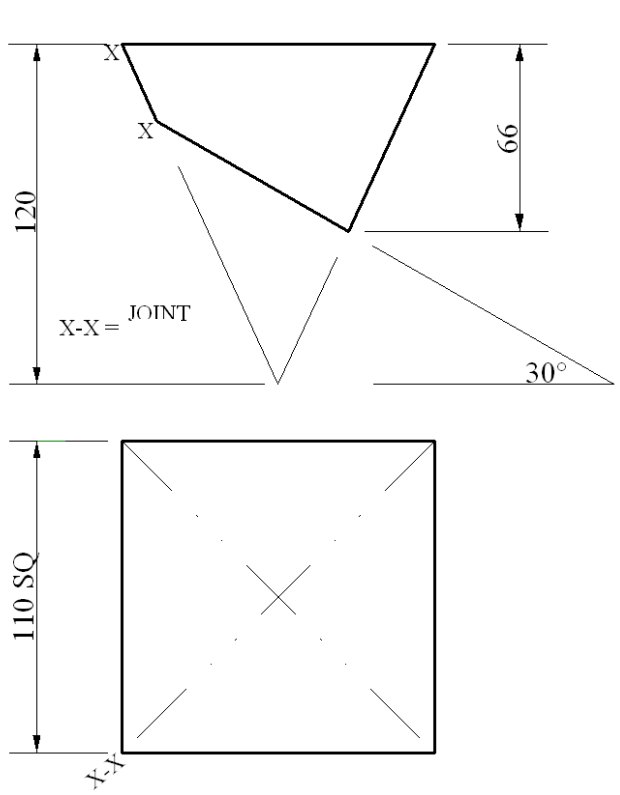


**FIGURE 1**

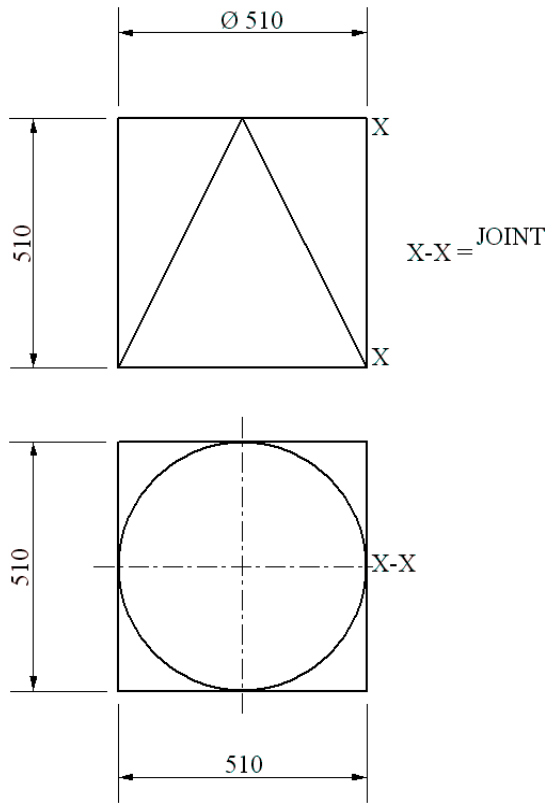


**FIGURE 2**

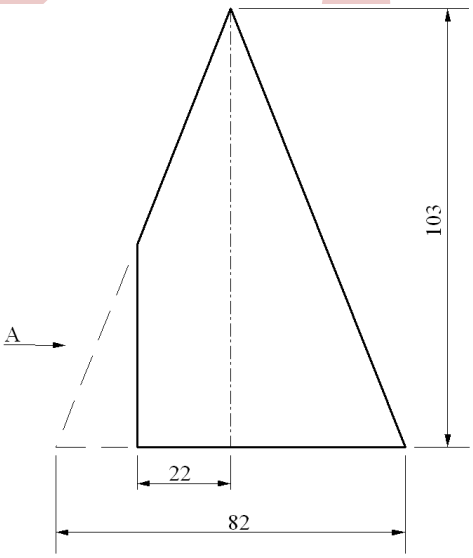


**FIGURE 3**

## DIAGRAM SHEET 2

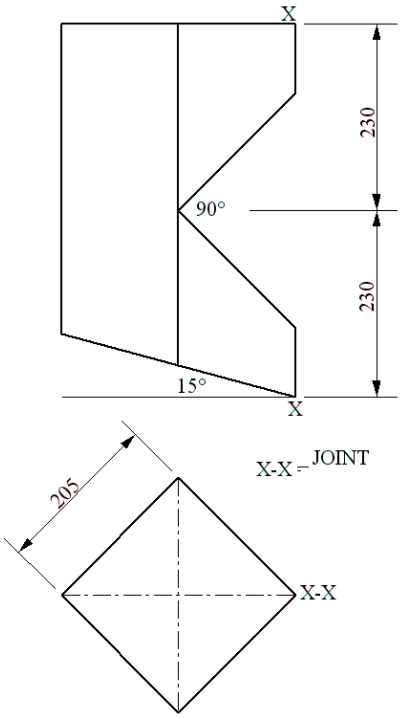


FIGURE 4

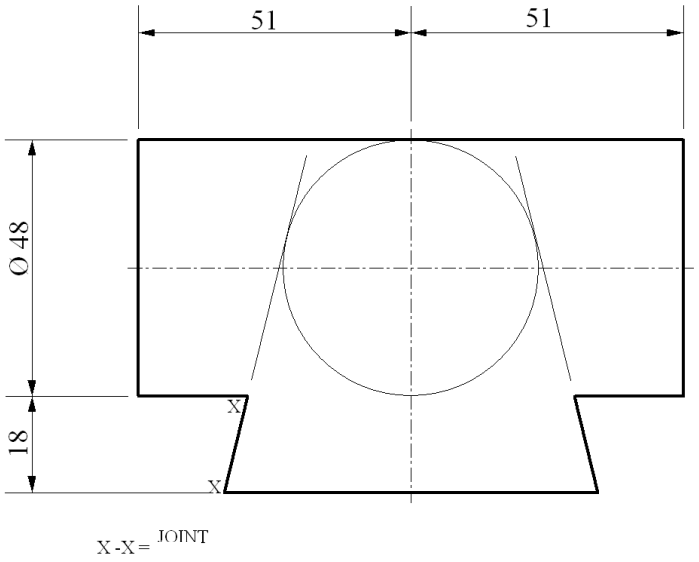


FIGURE 5

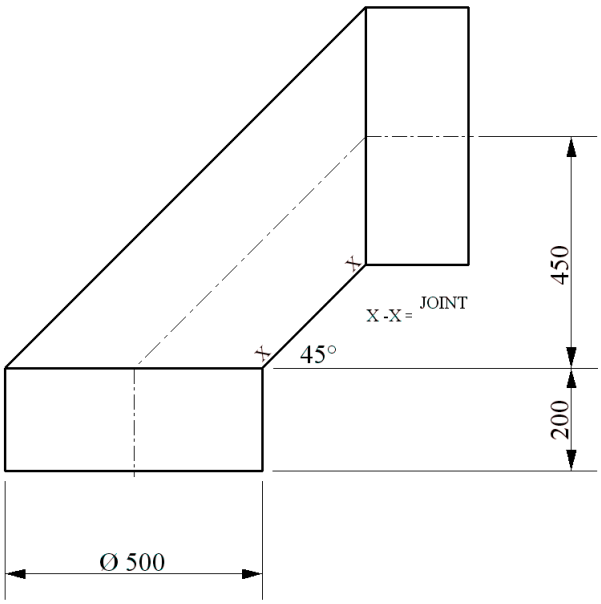


FIGURE 6

Copyright reserved