higher education & training

Department:
Higher Education and Training
REPUBLIC OF SOUTH AFRICA

MARKING GUIDELINE

NATIONAL CERTIFICATE

PLATING AND STRUCTURAL STEEL DRAWING N1

25 JULY 2018

This marking guideline consists of 10 pages.

Copyright reserved

MARKING GUIDELINE

QUESTION 1: RIGHT PYRAMID

Front view	2
Top view	3
Development	7
Scale	1
Accuracy	1
Neatness	1
TOTAL:	**15**

QUESTION 2: SQUARE-TO-ROUND

Front view	2
Top view	3
Development	12
Scale	1
Accuracy	1
Neatness	1
TOTAL:	**20**

QUESTION 3: CONE

Front view	3
Top view	2
True shape of the view on arrow A	6
Symbol	1
Scale	1
Accuracy	1
Neatness	1
TOTAL:	**15**

QUESTION 4: SQUARE PIPE

Front view	4
Top view	2
Development	6
Scale	1
Accuracy	1
Neatness	1
TOTAL:	**15**

Copyright reserved

QUESTION 5: CONE INTERSECTION

Front view	4
Line of penetration	3
Development	7
Shape of the hole in the right pipe	3
Scale	1
Accuracy	1
Neatness	1
TOTAL:	**20**

QUESTION 6: OBLIQUE PIPE

Front view	5
Development	7
Scale	1
Accuracy	1
Neatness	1
TOTAL:	**15**

Copyright reserved

QUESTION 1

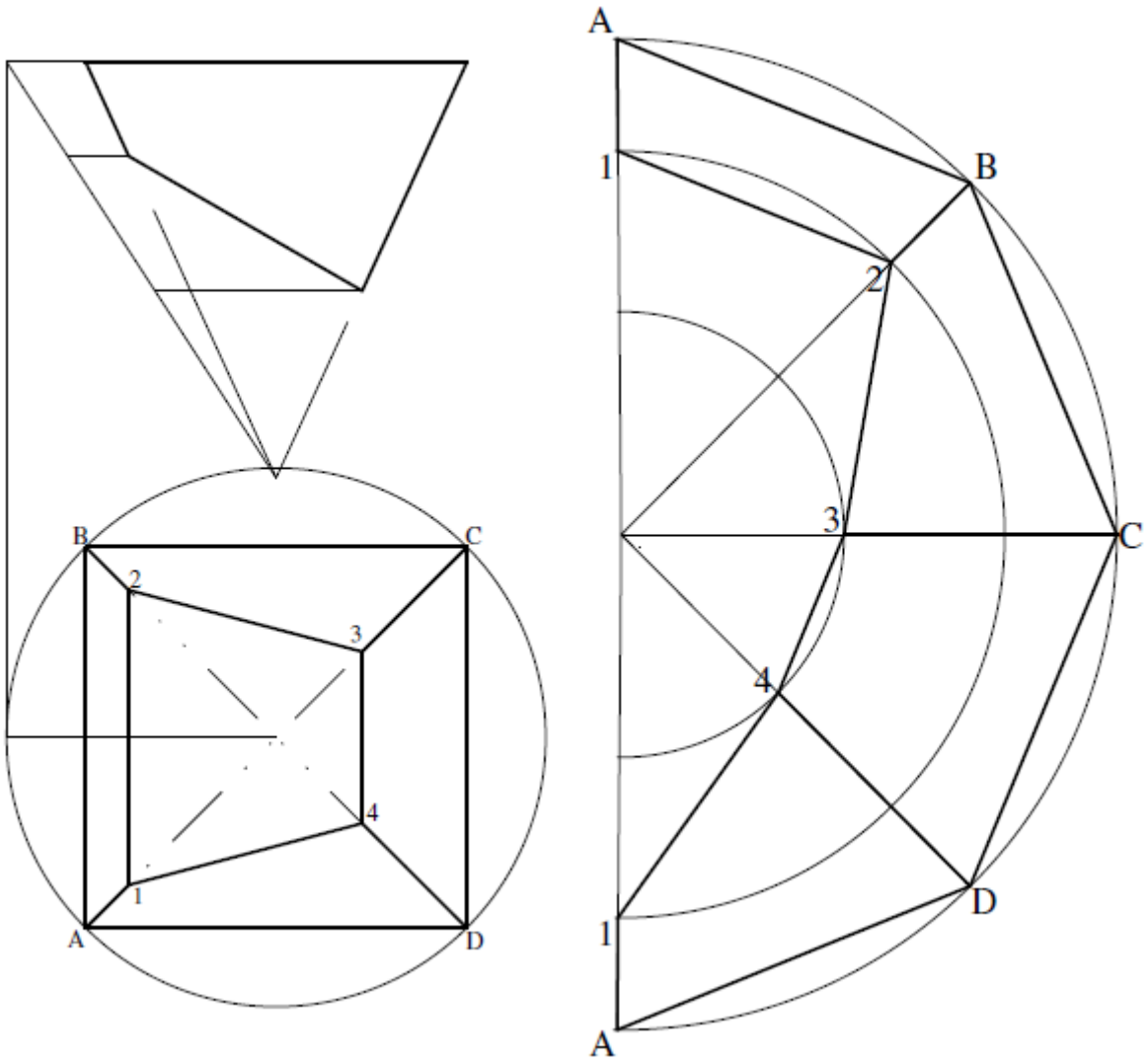

RIGHT PYRAMID
SCALE 1 : 2 **[15]**

QUESTION 2

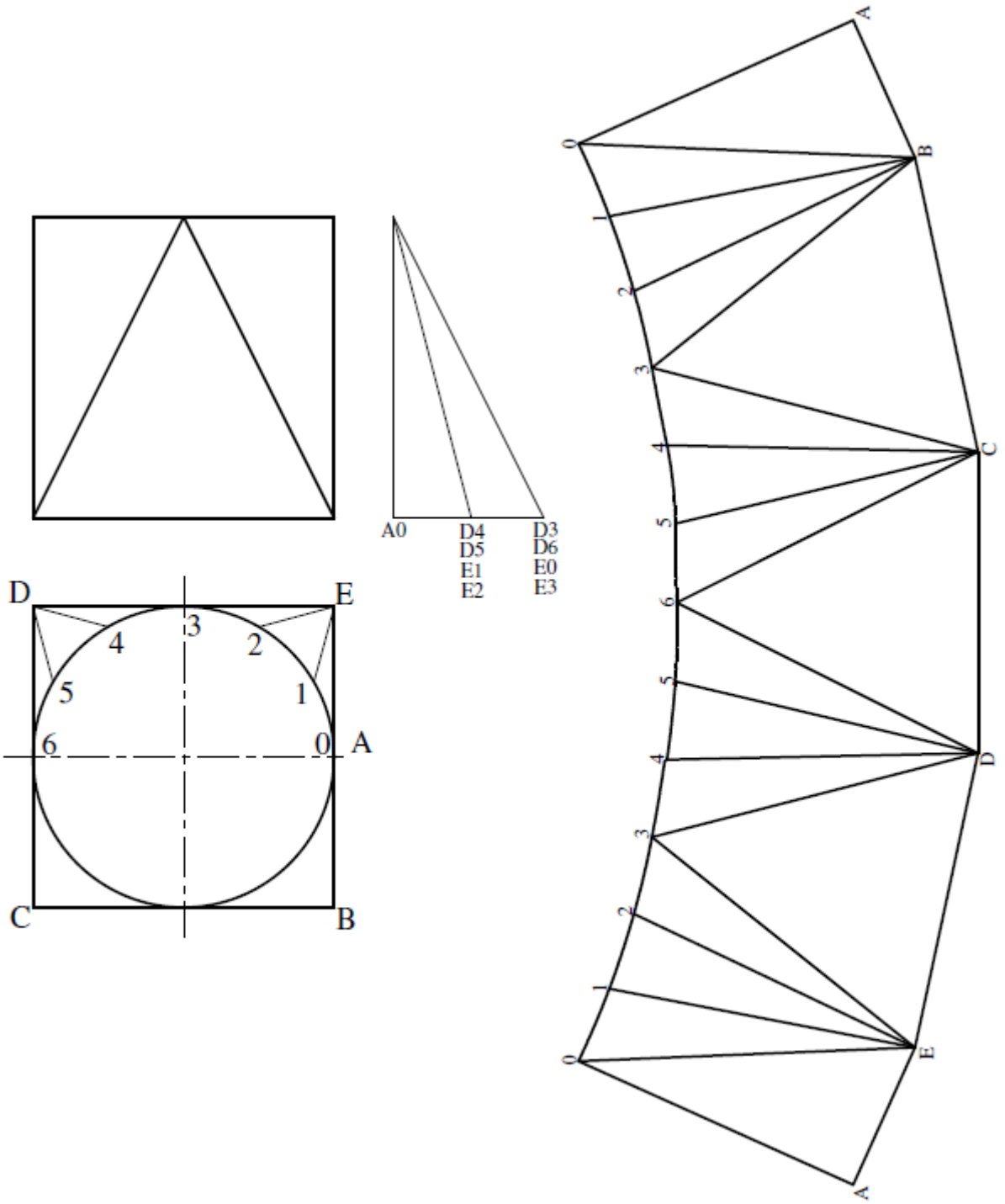

SQUARE-TO-ROUND
SCALE 1 : 10 **[20]**

QUESTION 3

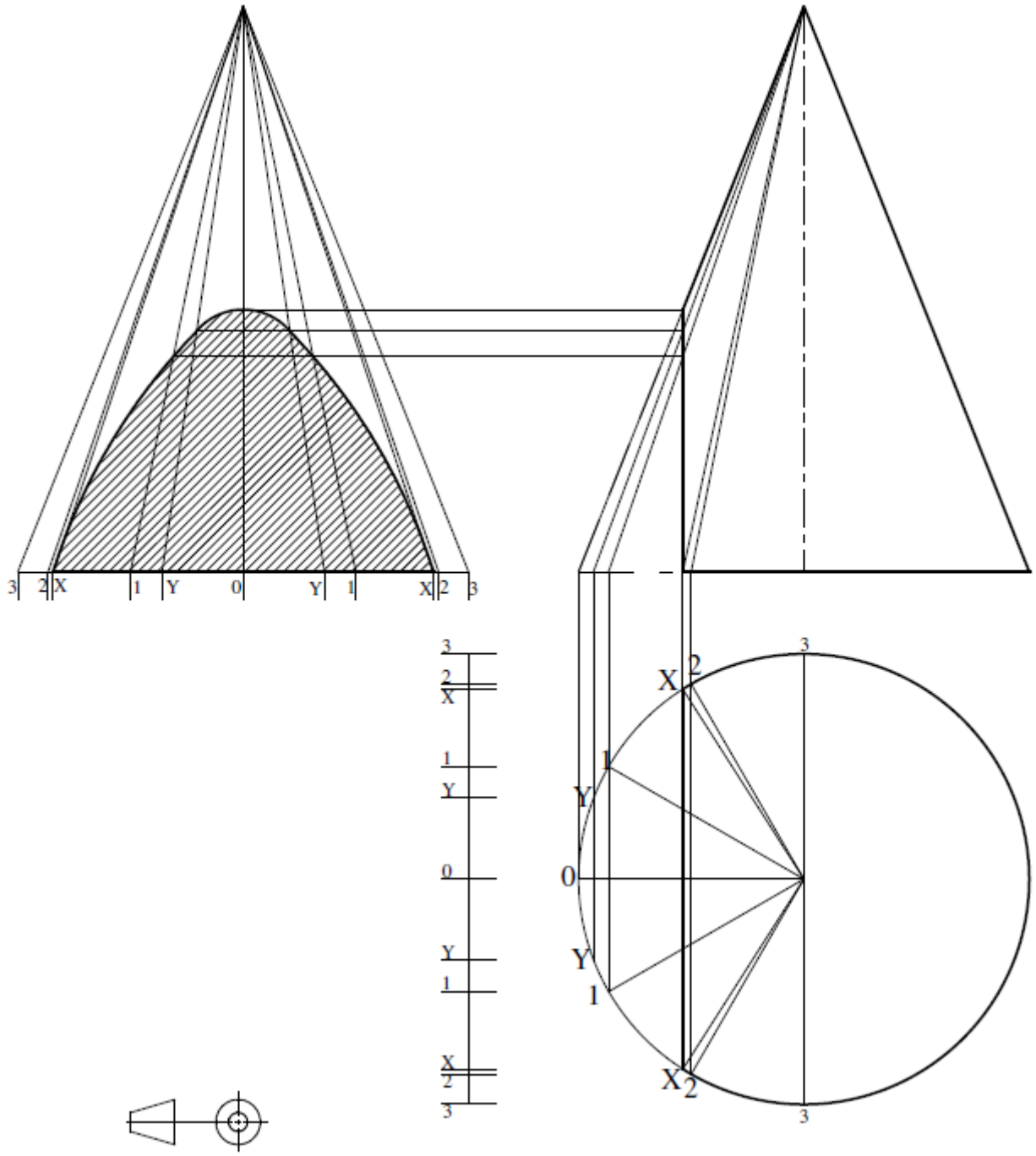

CONE
SCALE 1 : 1 **[15]**

QUESTION 4

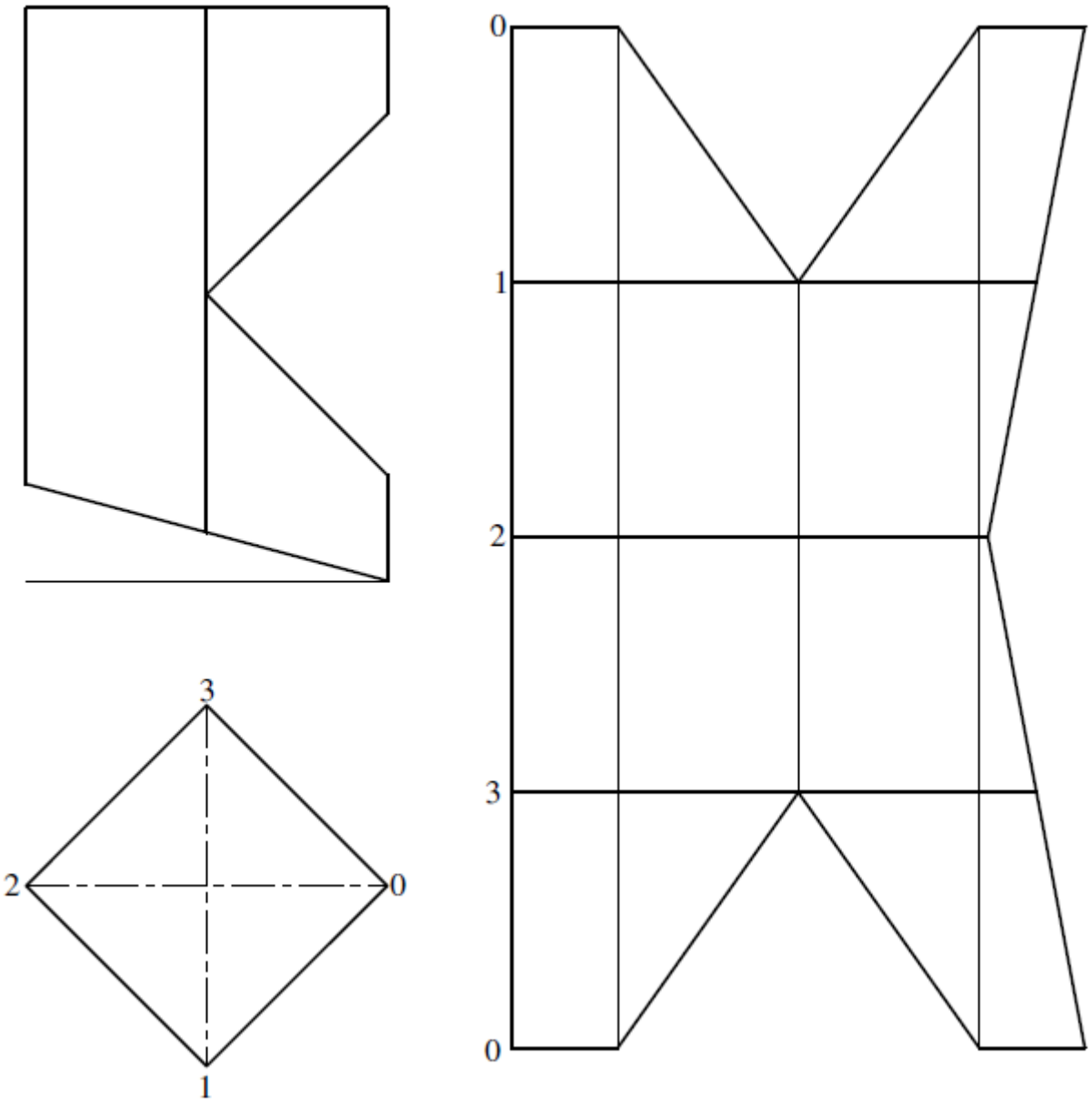

SQUARE PIPE
SCALE 1 : 5 **[15]**

QUESTION 5

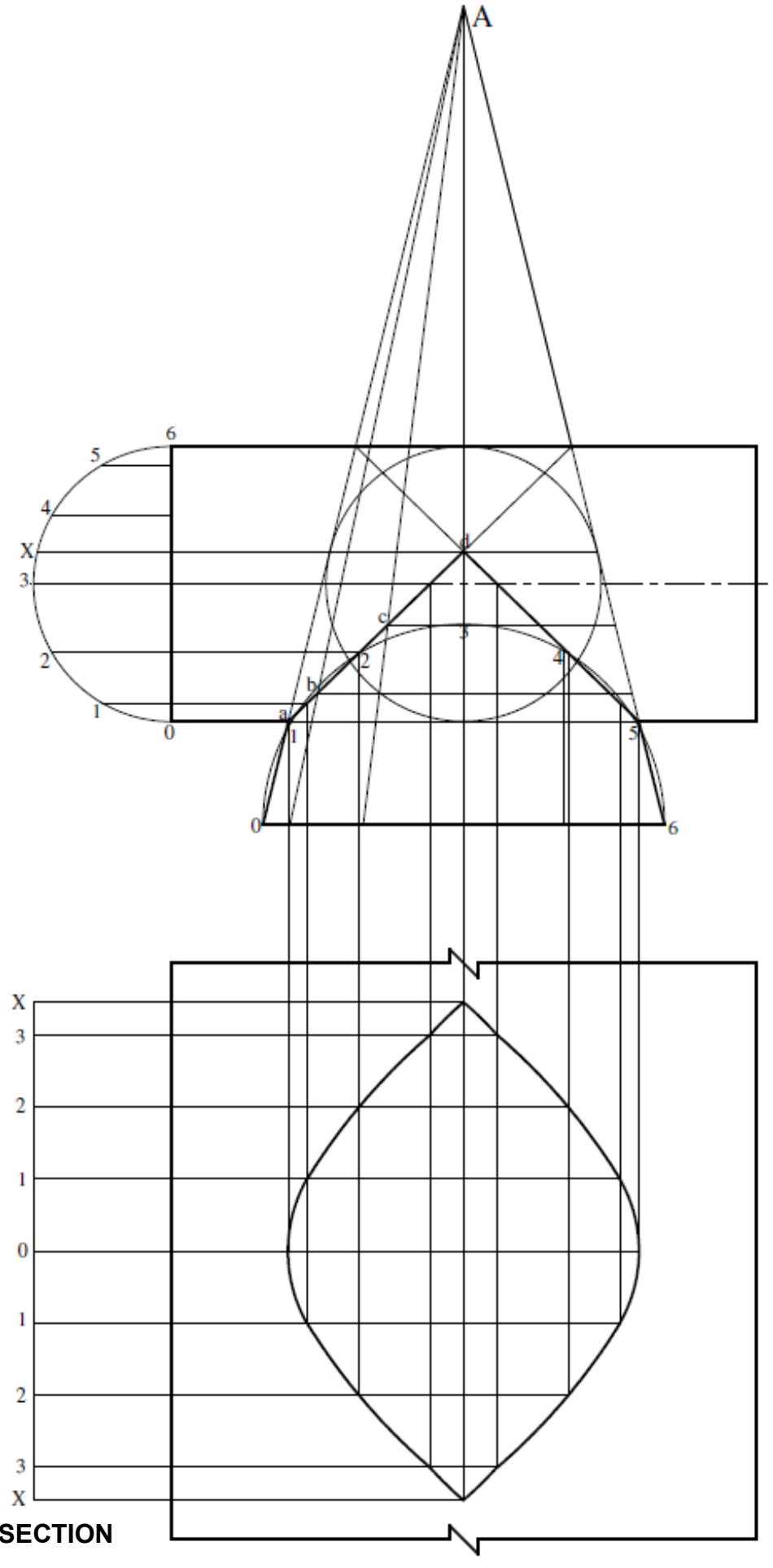

CONE INTERSECTION
SCALE 1 : 1

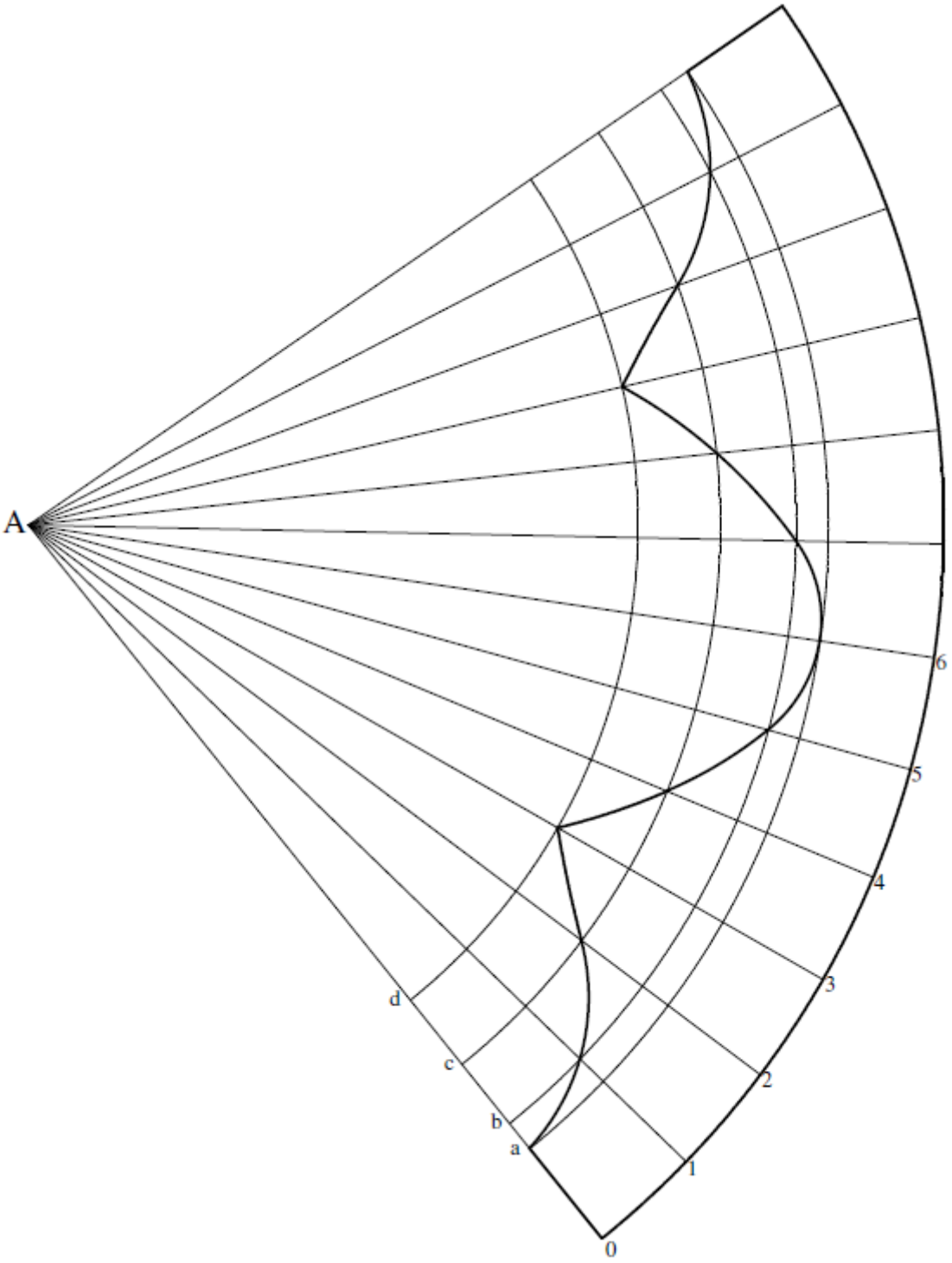

CONE INTERSECTION
SCALE 1 : 1 **[20]**

QUESTION 6

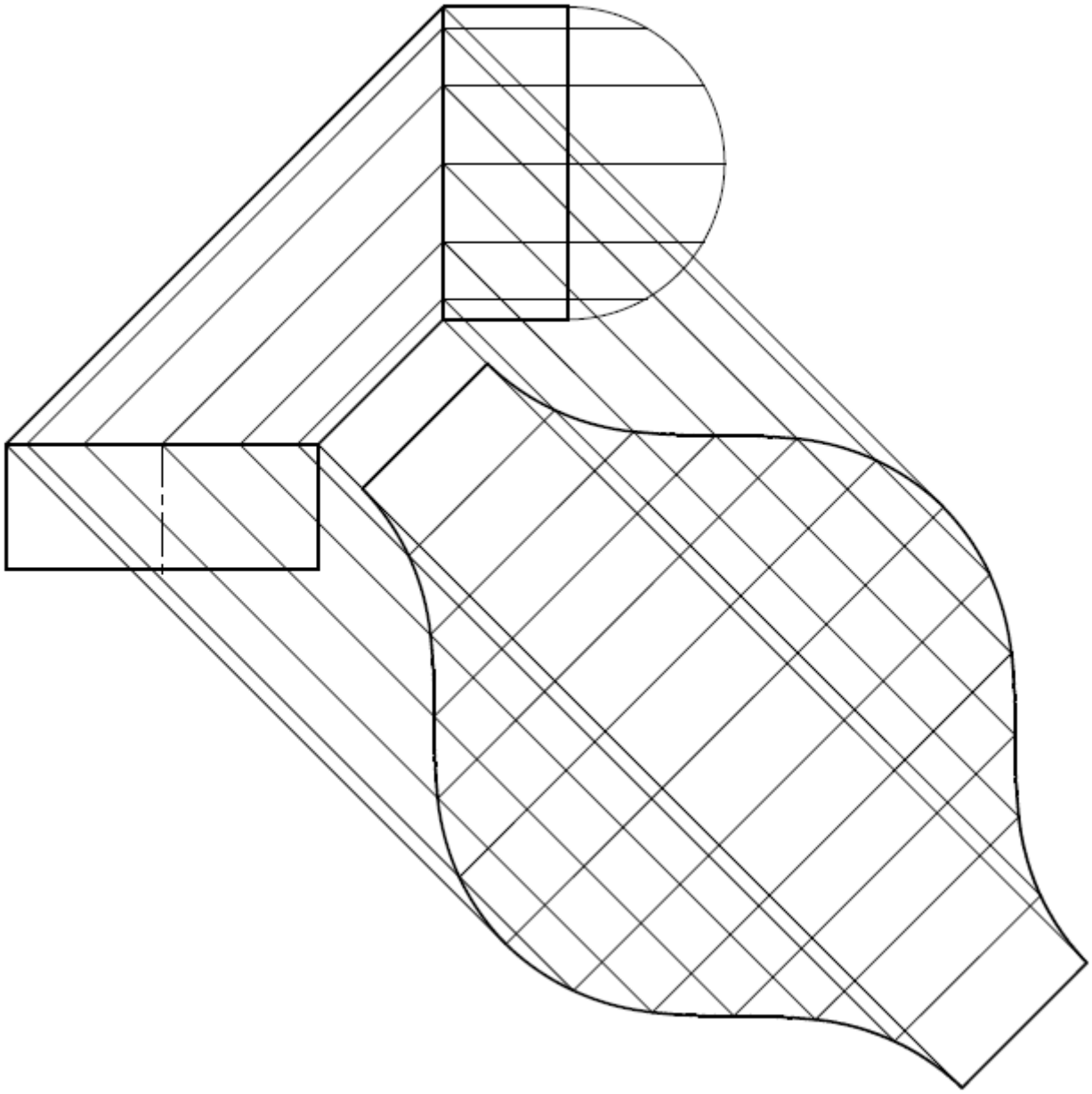

OBLIQUE PIPE
SCALE 1 : 10 **[15]**

TOTAL: 100

Copyright reserved