higher education & training

Department:
Higher Education and Training
REPUBLIC OF SOUTH AFRICA

NATIONAL CERTIFICATE

PLATING AND STRUCTURAL STEEL DRAWING N1

(8090091)

6 April 2021 (X-paper)
09:00–12:00

REQUIREMENTS: ONE A2 drawing sheet

Drawing instruments may be used.

This question paper consists of 5 pages and 2 diagram sheets.

042Q1A2106

Copyright reserved

DEPARTMENT OF HIGHER EDUCATION AND TRAINING
REPUBLIC OF SOUTH AFRICA

NATIONAL CERTIFICATE
PLATING AND STRUCTURAL STEEL DRAWING N1
TIME: 3 HOURS
MARKS: 100

INSTRUCTIONS AND INFORMATION

1. Answer all the questions.
2. Read all the questions carefully.
3. Number the answers according to the numbering system used in this question paper.
4. All construction lines must be shown.
5. Add all the dimensions and descriptions unless otherwise stated.
6. Only ONE drawing sheet may be used.
7. Use both sides of the drawing sheet.
8. A 15 mm border must be drawn on both sides of the drawing sheet.
9. Marks will be allocated for neatness.

Copyright reserved

QUESTION 1

FIGURE 1, DIAGRAM SHEET 1 shows the front view of a solid cone with a 60° cut, in first-angle orthographic projection. The cone will be used as a model in drawing classes at a TVET college.

Draw to scale 1:2 the following views:

1.1 The front view of the cone

1.2 The top view of the cone

1.3 The true shape of the cut as seen in the direction of arrow 'A'

Use the correct symbol to indicate the projection.

The completed drawing must clearly indicate all the construction lines. The following title and scale must be printed centrally beneath the finished drawing:

CONE
SCALE 1:2

[15]

QUESTION 2

FIGURE 2, DIAGRAM SHEET 1 shows a Y-piece made of TWO oblique pipes with THREE right pipes fitted at the ends. The Y-piece will be used as part of the exhaust piping of an engine in the motor workshop of a college.

Draw to scale 1:1 the following views:

2.1 The given view of the Y-piece

2.2 The pattern of the plate to make oblique pipe 'A' of the Y-piece. The joint of the pattern is at X-X.

The completed drawing must clearly indicate all the construction lines. The following title and scale must be printed centrally beneath the finished drawing:

Y-PIECE
SCALE 1:1

[15]

Copyright reserved

QUESTION 3

FIGURE 3, DIAGRAM SHEET 1 shows TWO views of an oblique T-piece made up of a hexagonal main pipe and a circular branch pipe. The T-piece will be used as a fitting to a machine in a toy manufacturing factory.

Draw to scale 1:2 the following views:

3.1 The TWO given views of the oblique T-piece

3.2 The construction of the line of interpenetration between the hexagonal main pipe and the circular branch pipe

3.3 The shape of the hole in the hexagonal main pipe

3.4 The pattern of the plate to manufacture the circular branch pipe. The joint of the pattern is at X-X

The completed drawing must clearly indicate all the construction lines. The following title and scale must be printed centrally beneath the finished drawing:

OBLIQUE T-PIECE
SCALE 1:2

[20]

QUESTION 4

FIGURE 4, DIAGRAM SHEET 2 shows a cone with a 30° cut. The cone will be part of the ducting in a dust extraction plant at the carpentry workshop of a college.

Draw to scale 1:5 the following views:

4.1 The given view of the cone

4.2 The pattern of the plate to make the cone. The joint of the pattern is at X-X.

The completed drawing must clearly indicate all the construction lines. The following title and scale must be printed centrally beneath the finished drawing:

CONICAL SECTION
SCALE 1:5

[15]

Copyright reserved

QUESTION 5

FIGURE 5, DIAGRAM SHEET 2 shows TWO views of a square-to-round transition piece. The transition piece will be used as part of the stainless-steel piping at a fruit juice processing company.

Draw to scale 1:1 the following views:

5.1 The TWO given views of the square-to-round transition piece

5.2 The pattern of the plate to make the square-to-round transition piece. The joint of the pattern is at X-X.

The completed drawing must clearly indicate all the construction lines. The following title and scale must be printed centrally beneath the finished drawing:

SQUARE-TO-ROUND
SCALE 1:1

[20]

QUESTION 6

FIGURE 6, DIAGRAM SHEET 2 shows TWO views of a cone connecting into a round pipe at 90°. The cone connection will be part of the ducting in the ventilation system at a hospital.

Draw to scale 1:2 the following views:

6.1 The TWO given views of the cone connecting into a round pipe

6.2 The pattern of the plate to make the cone. The joint of the pattern is at X-X.

The completed drawing must clearly indicate all the construction lines. The following title and scale must be printed centrally beneath the finished drawing:

CONE CONNECTION
SCALE 1:2

[15]

TOTAL: 100

Copyright reserved

DIAGRAM SHEET 1

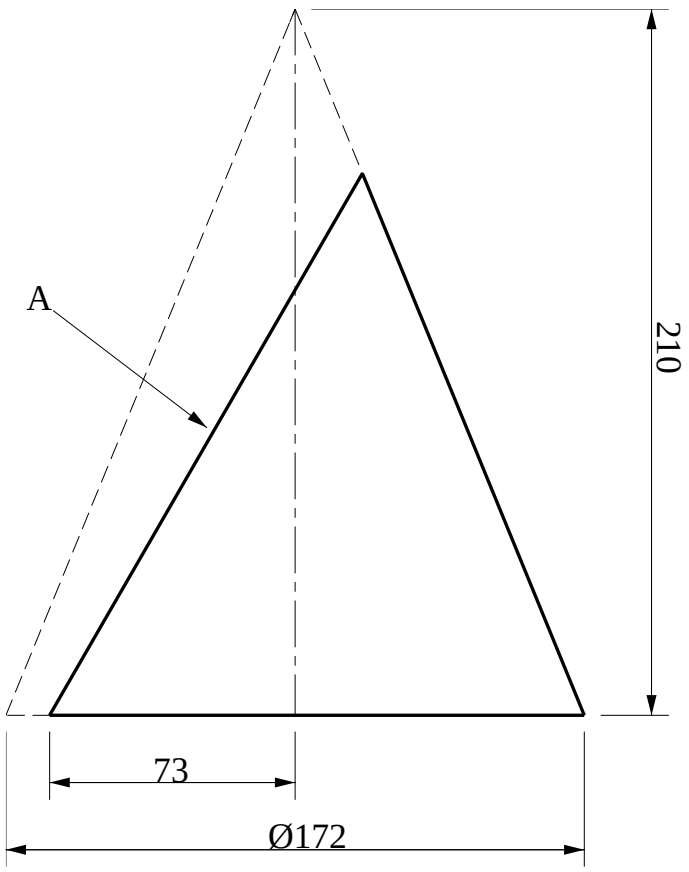

FIGURE 1

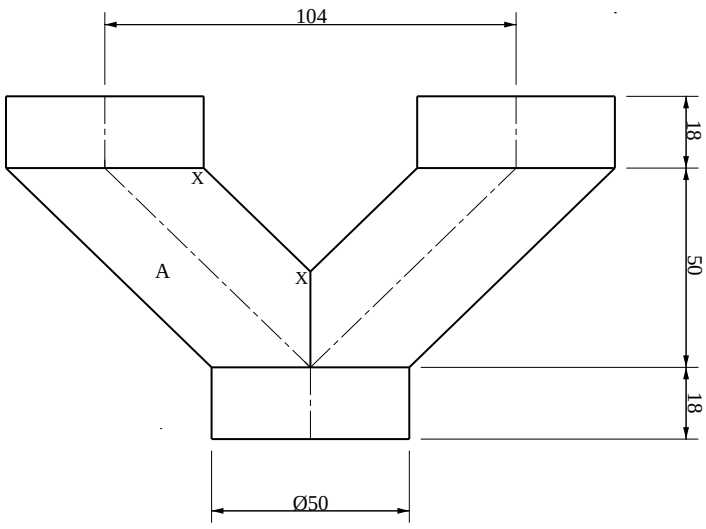

FIGURE 2

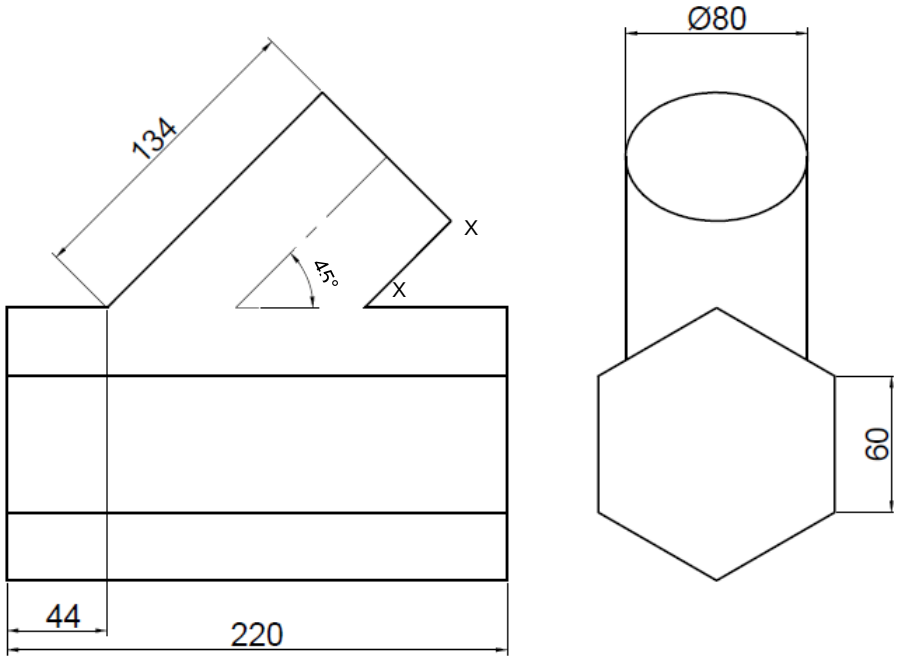

FIGURE 3

Copyright reserved

DIAGRAM SHEET 2

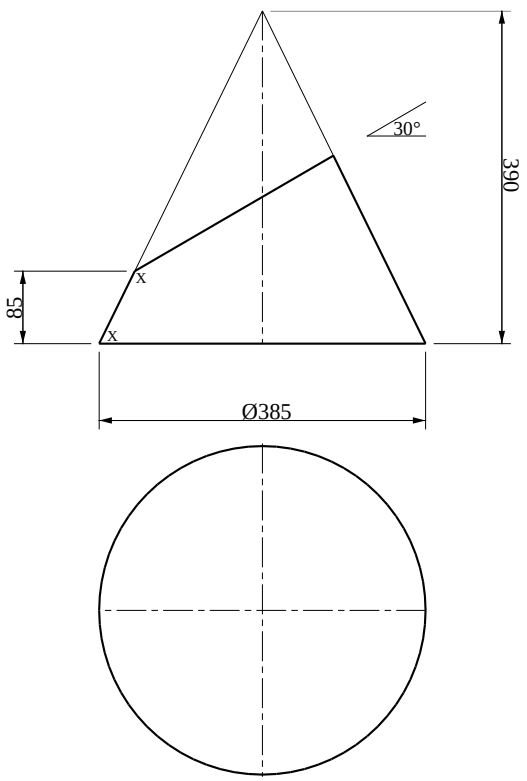

FIGURE 4

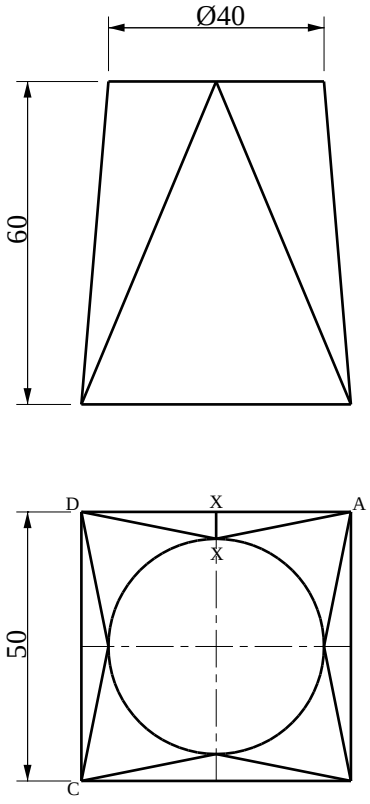

FIGURE 5

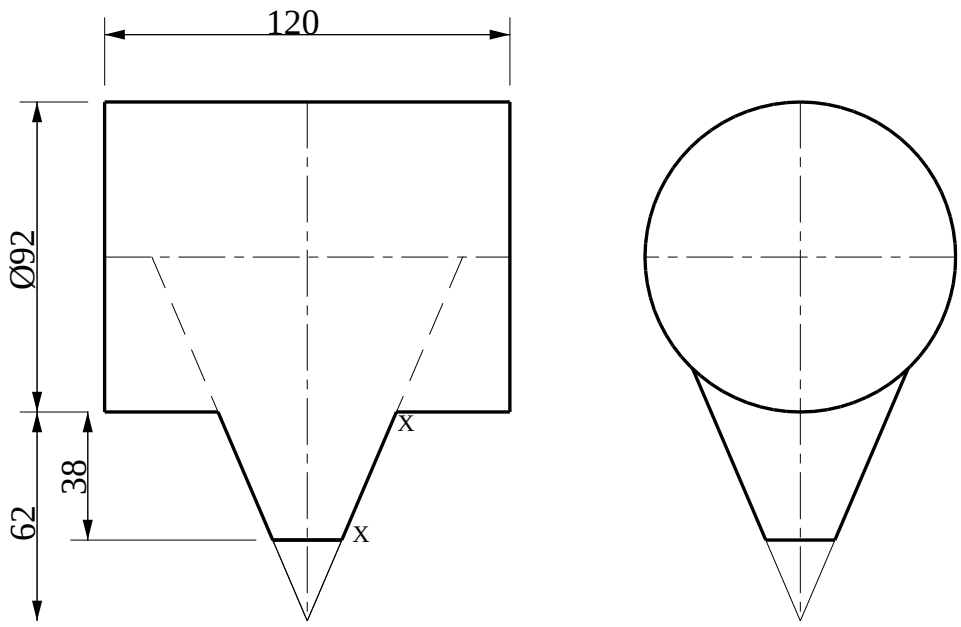

FIGURE 6

Copyright reserved