higher education & training

Department:
Higher Education and Training
REPUBLIC OF SOUTH AFRICA

MARKING GUIDELINE

NATIONAL CERTIFICATE

PLATING AND STRUCTURAL STEEL DRAWING N1

6 April 2021

This marking guideline consists of 10 pages.

Copyright reserved

MARK SHEET

QUESTION 1: CONE

ACTIVITY	MARK
Front view	2
Top view	3
True view on arrow 'A'	6
Symbol	1
Scale	1
Accuracy	1
Neatness	1
TOTAL	**15**

QUESTION 2: Y-PIECE

ACTIVITY	MARK
Front view	4
Pattern of part 'A' of the Y-piece	8
Scale	1
Accuracy	1
Neatness	1
TOTAL	**15**

QUESTION 3: OBLIQUE T-PIECE

ACTIVITY	MARK
Front view without the line of interpenetration	2
Left view	3
Line of interpenetration in the front view	3
Shape of the hole in the main pipe	3
Pattern of the circular branch pipe	6
Scale	1
Accuracy	1
Neatness	1
TOTAL	**20**

QUESTION 4: CONICAL SECTION

ACTIVITY	MARK
Front view	2
Completed top view	4
Pattern of the cone	6
Scale	1
Accuracy	1
Neatness	1
TOTAL	**15**

Copyright reserved

QUESTION 5: SQUARE-TO-ROUND

ACTIVITY	MARK
Front view	2
Top view	5
Pattern of the square-to-round transition piece	10
Scale	1
Accuracy	1
Neatness	1
TOTAL	**20**

QUESTION 6: CONE CONNECTION

ACTIVITY	MARK
Front view without a line of interpenetration	2
Left view	2
Line of interpenetration in the front view	2
Pattern of the plate to form the cone	6
Scale	1
Accuracy	1
Neatness	1
TOTAL	**15**

TOTAL: 100

QUESTION 1

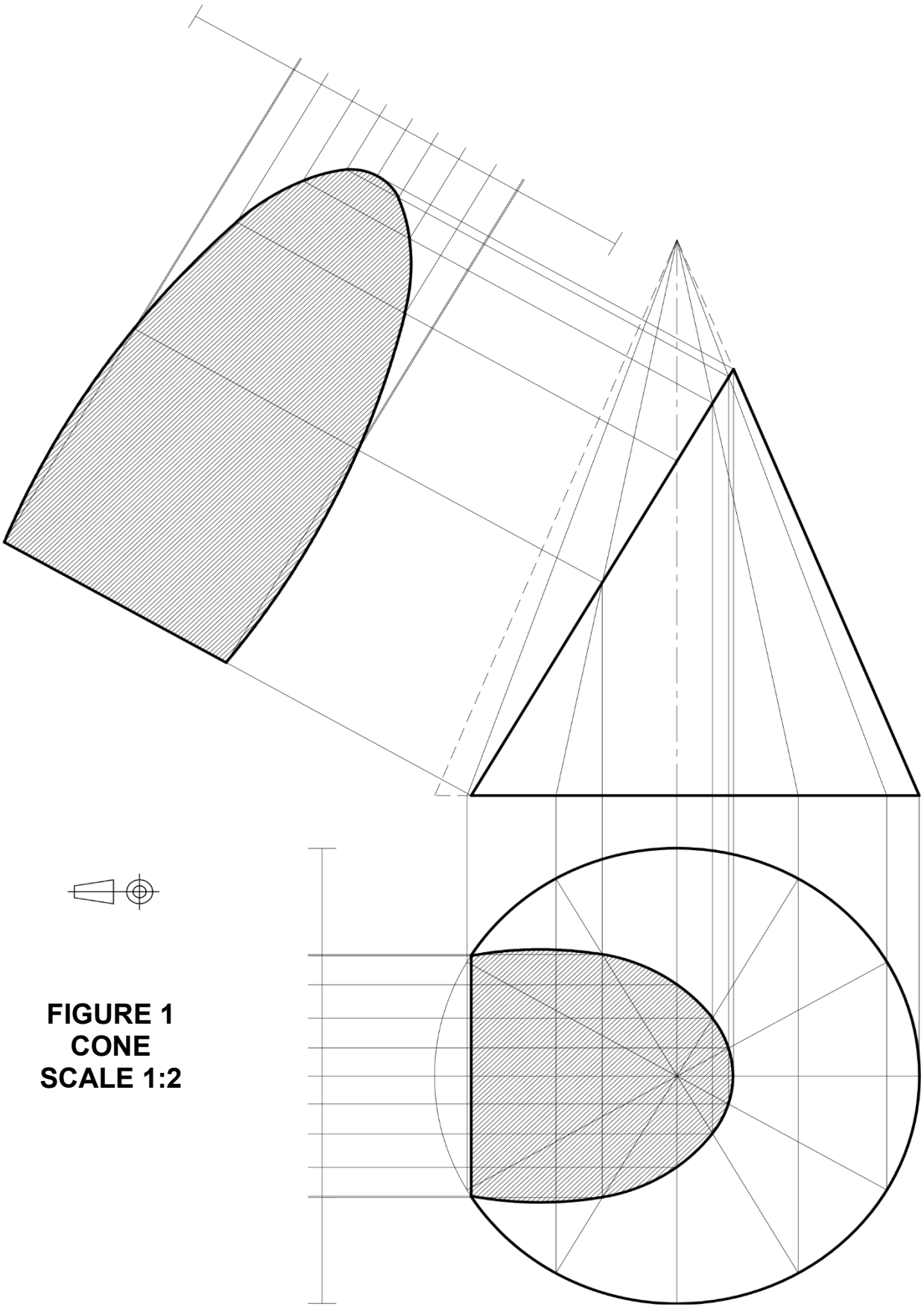

FIGURE 1
CONE
SCALE 1:2

QUESTION 2

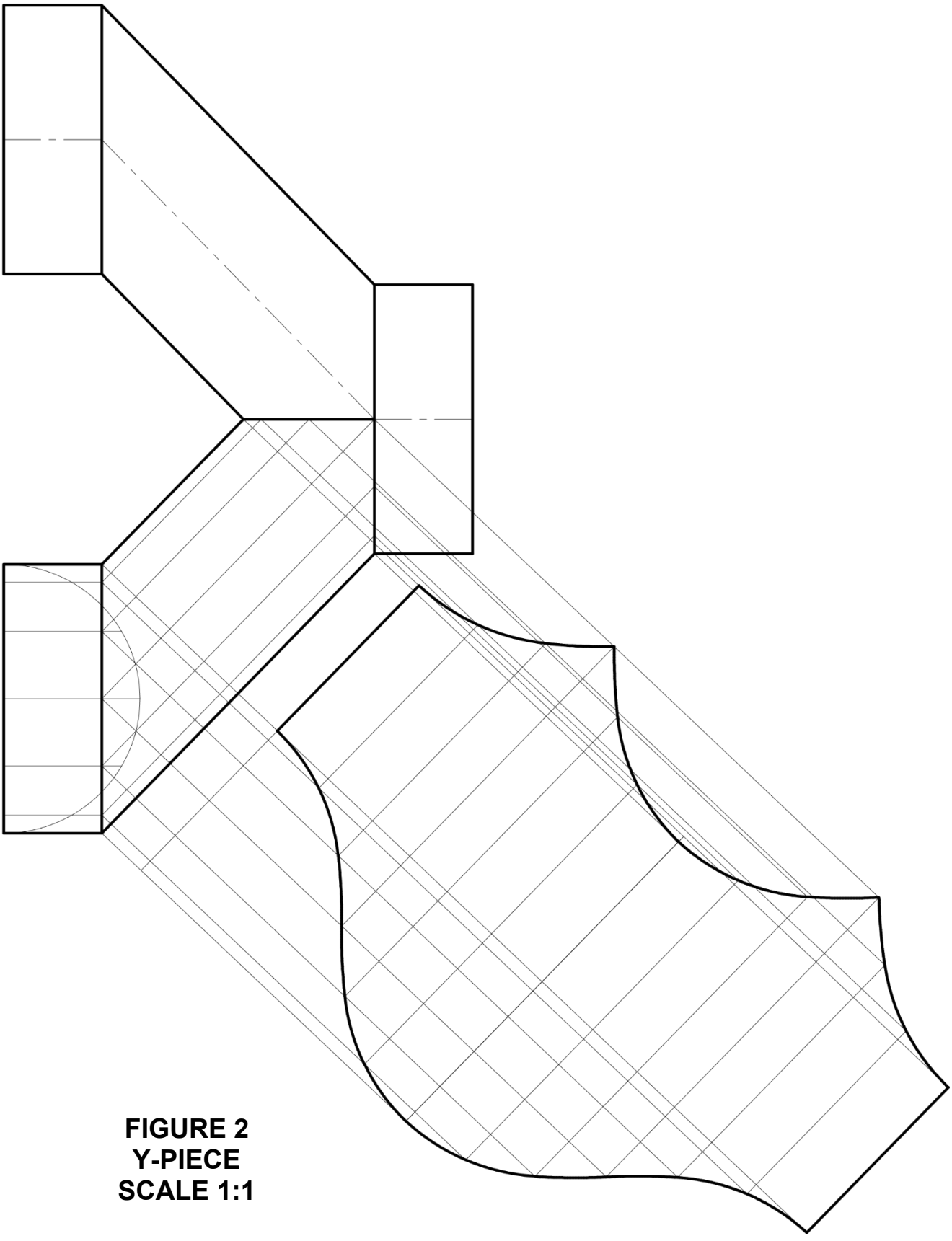

FIGURE 2
Y-PIECE
SCALE 1:1

QUESTION 3

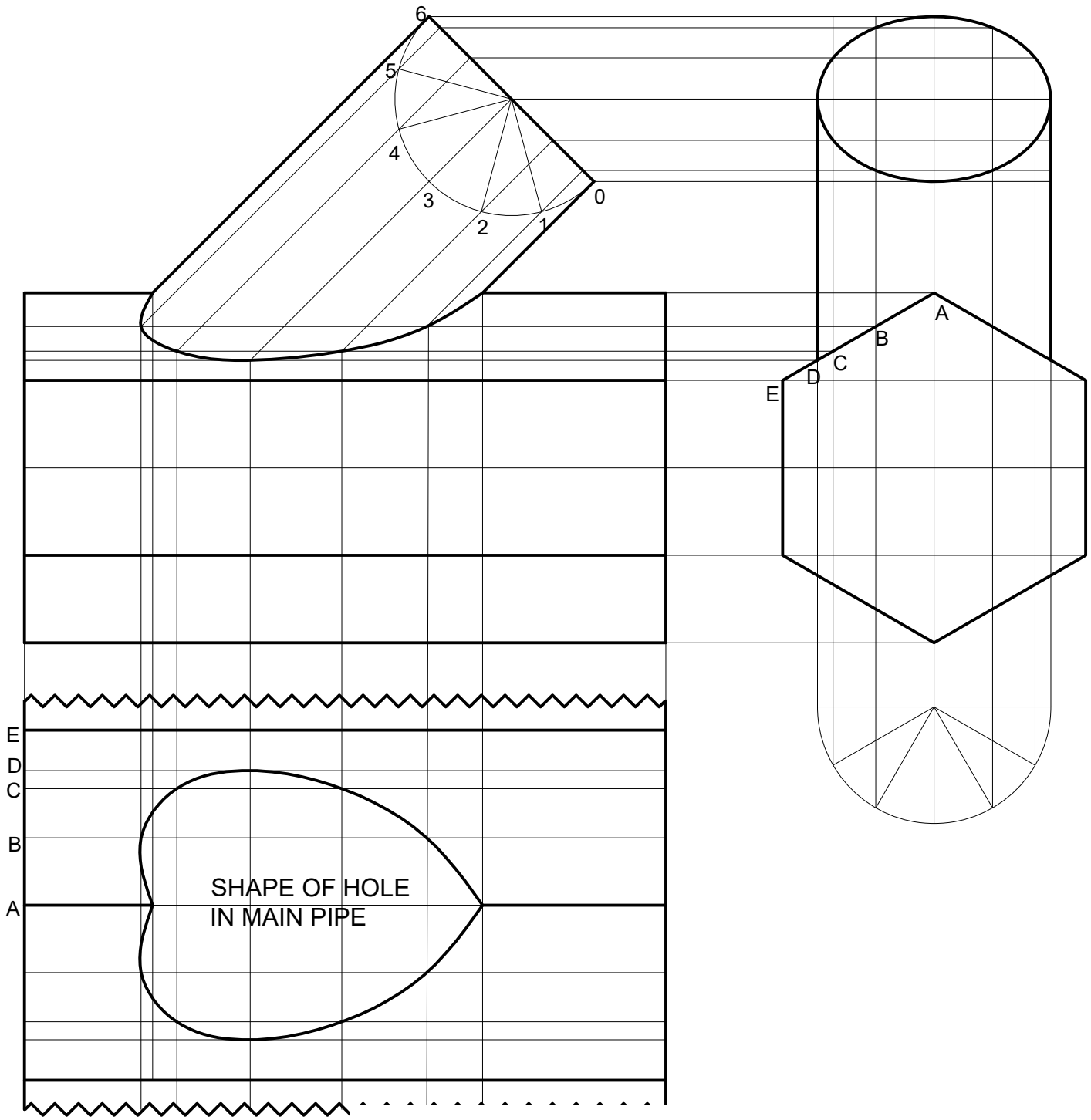

FIGURE 3
OBLIQUE T-PIECE
SCALE 1:2

QUESTION 3

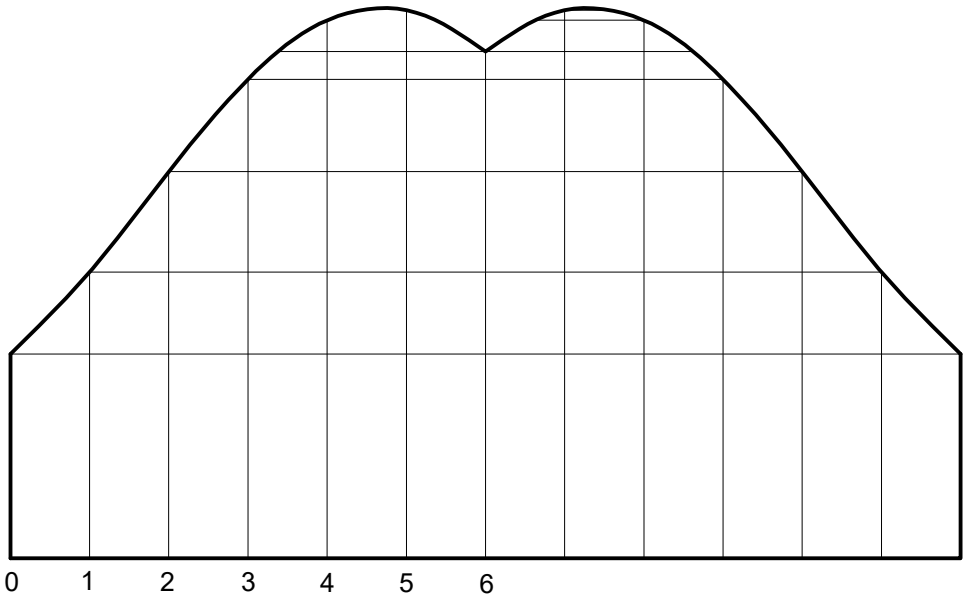

FIGURE 3
OBLIQUE T-PIECE
SCALE 1:2

QUESTION 4

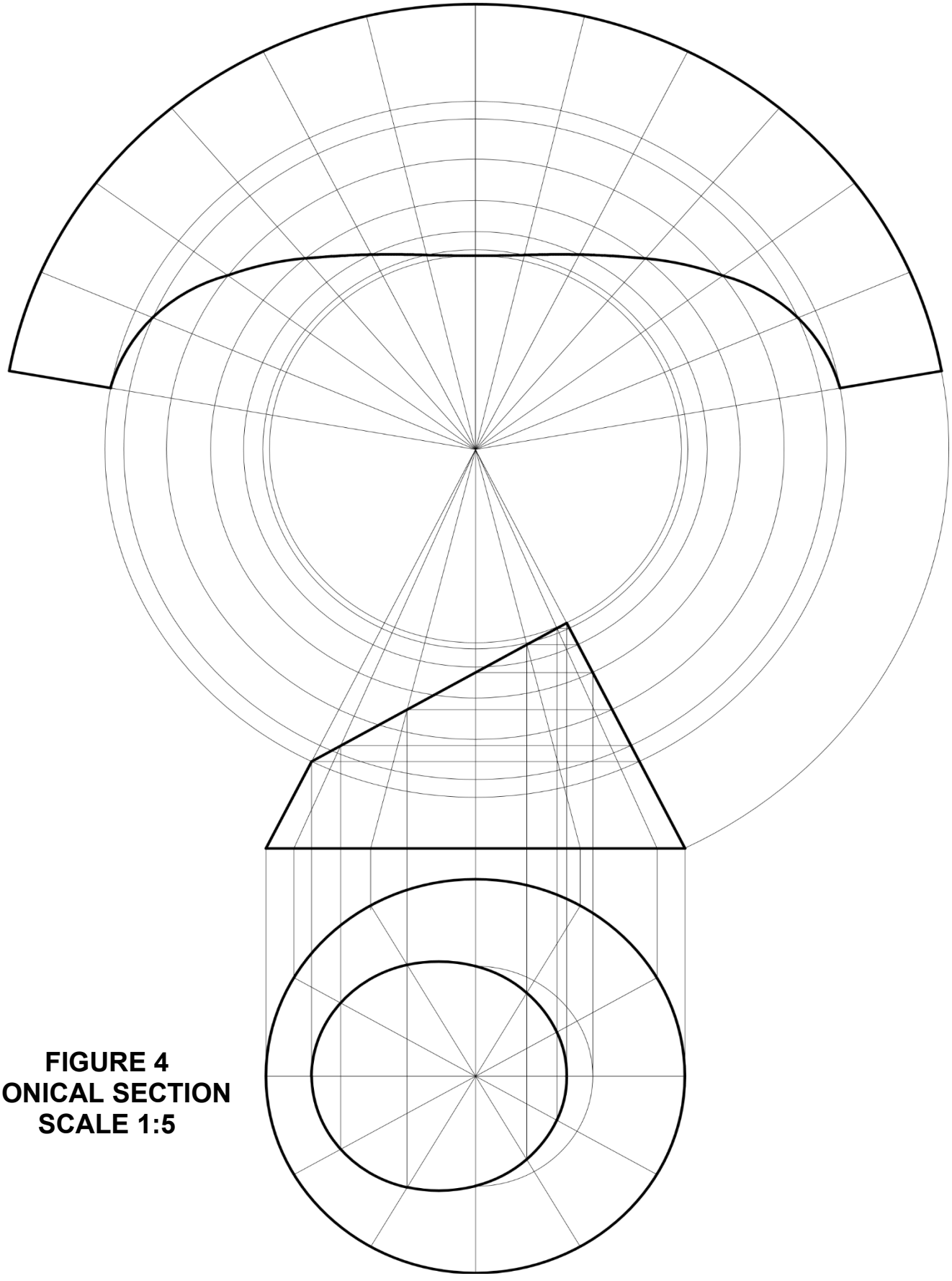

FIGURE 4
CONICAL SECTION
SCALE 1:5

QUESTION 5

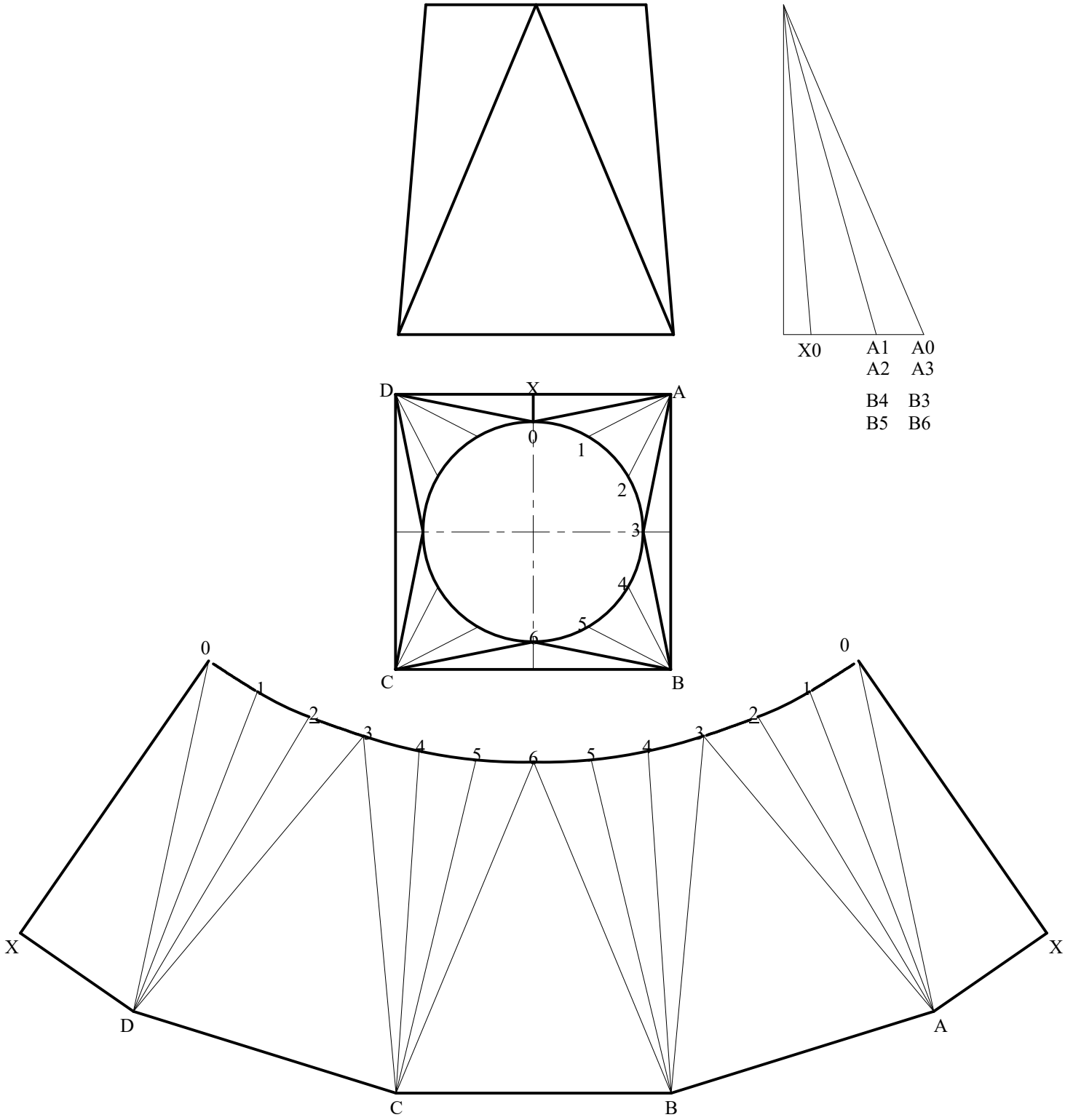

FIGURE 5
SQUARE-TO-ROUND
SCALE 1:1

QUESTION 6

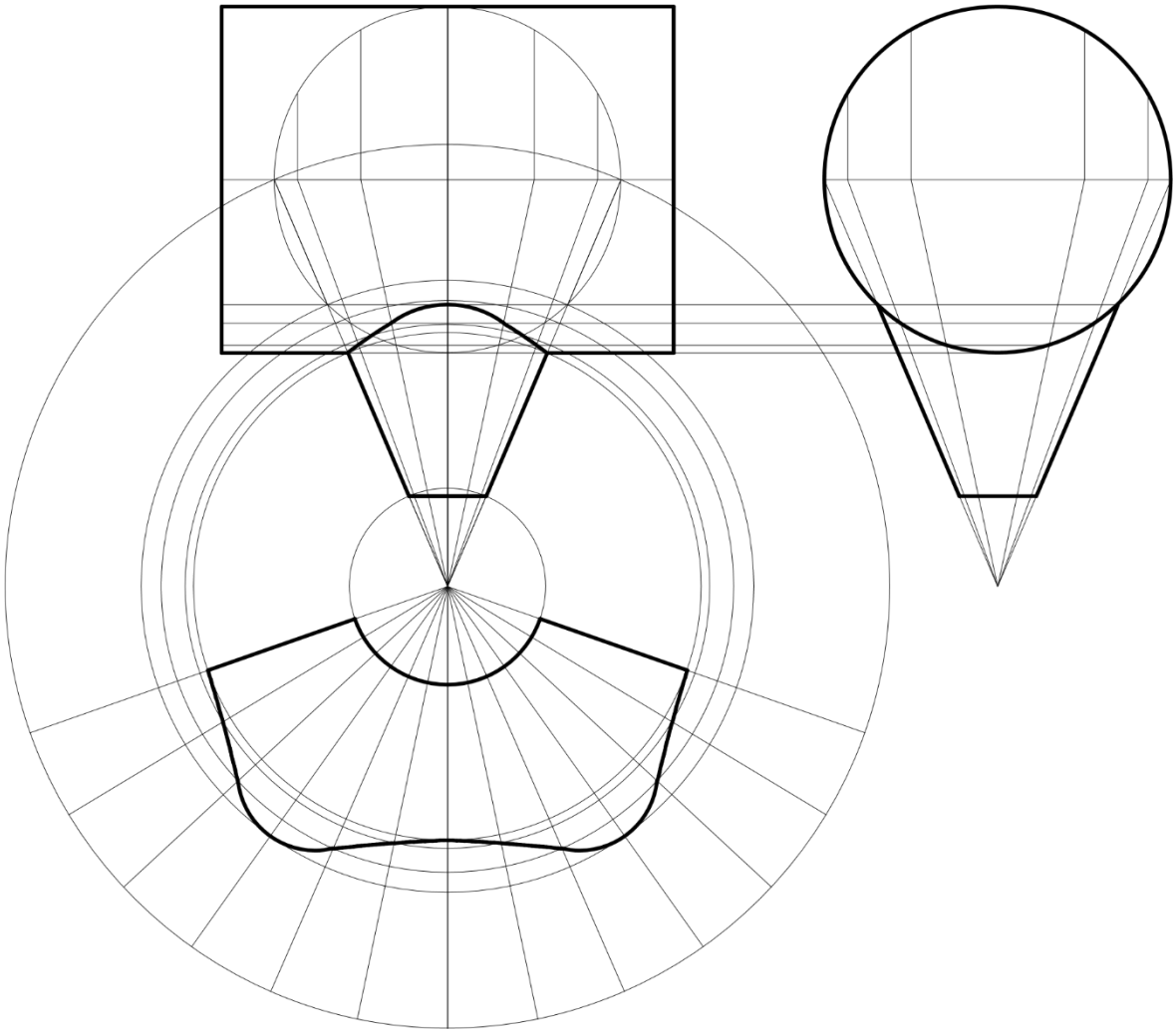

FIGURE 6
CONE CONNECTION
SCALE 1:2

Copyright reserved