higher education & training

Department:
Higher Education and Training
REPUBLIC OF SOUTH AFRICA

NATIONAL CERTIFICATE

PLATING AND STRUCTURAL STEEL DRAWING N1

(8090091)

1 April 2020 (X-paper)
09:00–13:00

REQUIREMENTS: ONE A2 drawing sheet

This question paper consists of 5 pages and 2 diagram sheets.

052Q1A2001

Copyright reserved

DEPARTMENT OF HIGHER EDUCATION AND TRAINING
REPUBLIC OF SOUTH AFRICA

NATIONAL CERTIFICATE
PLATING AND STRUCTURAL STEEL DRAWING N1
TIME: 4 HOURS
MARKS: 100

INSTRUCTIONS AND INFORMATION

1. Answer all the questions.
2. Read all the questions carefully.
3. Number the answers according to the numbering system used in this question paper.
4. Show all construction lines.
5. Add all dimensions and descriptions unless stated otherwise.
6. Marks will be allocated for neatness.
7. Use only ONE DRAWING SHEET.
8. Draw on both sides of the DRAWING SHEET.
9. Draw a 15 mm border line on both sides of the DRAWING SHEET.
10. Work neatly.

Copyright reserved

QUESTION 1

FIGURE 1, DIAGRAM SHEET 1 (attached), shows the front view of a solid cone with a 60° cut in first-angle orthographic projection. The cone will be used as a model in the drawing classes at a technical high school.

Draw, to scale 1:2, each of the following views:

1.1 The front view of the solid cone

1.2 The top view of the solid cone

1.3 The true shape of the cut as seen in the direction of arrow A

Use the symbol to indicate the projection. The completed drawing must clearly indicate all construction lines. Print the following title and scale centred beneath the finished drawing:

CONE
SCALE 1:2 **[15]**

QUESTION 2

FIGURE 2, DIAGRAM SHEET 1 (attached), shows a 240 mm diameter right pipe cut at both ends. The pipe will be used as part of the ducting in an air-conditioning plant at a warehouse.

Draw, to scale 1:5, each of the following views:

2.1 The given view of the right pipe

2.2 The pattern of the plate to make the pipe – the joint of the pattern is at X-X

The completed drawing must clearly indicate all construction lines. Print the following title and scale centred beneath the finished drawing:

RIGHT PIPE
SCALE 1:5 **[15]**

Copyright reserved

QUESTION 3

FIGURE 3, DIAGRAM SHEET 1 (attached), shows the front view and an incomplete top view of a truncated hexagonal pyramid. The pyramid will be used to fit to a machine with a hexagonal opening.

Draw, to scale 1:5, each of the following views:

3.1 The front view of the pyramid

3.2 The completed top view of the pyramid

3.3 The pattern of the plate to fabricate the pyramid – the joint of the pyramid is at X-X

The completed drawing must clearly indicate all construction lines. Print the following title and scale centred beneath the finished drawing:

TRUNCATED HEXAGONAL PYRAMID
SCALE 1:5 **[15]**

QUESTION 4

FIGURE 4, DIAGRAM SHEET 2 (attached), shows an elbow made from two right pipes. The elbow will be used as part of the modification to the exhaust of a tractor at a farm.

Draw, to scale 1:2, each of the following views:

4.1 The given view of the elbow

4.2 The pattern of the plate to fabricate part B of the elbow – the joint of the pattern is at X-X

The completed drawing must clearly indicate all construction lines. Print the following title and scale centred beneath the finished drawing:

PIPE ELBOW
SCALE 1:2 **[15]**

Copyright reserved

QUESTION 5

FIGURE 5, DIAGRAM SHEET 2 (attached), shows two views of a square-to-round transition piece. The transition piece is part of the piping of the heating system in a residence for students at a university.

Draw, to scale 1:1, each of the following views:

5.1 The given view of the square-to-round transition piece

5.2 The pattern of the plate to fabricate the transition piece – the joint of the pattern is at X-X

The completed drawing must clearly indicate all construction lines. Print the following title and scale centred beneath the finished drawing:

SQUARE-TO-ROUND
SCALE 1:1 **[20]**

QUESTION 6

FIGURE 6, DIAGRAM SHEET 2 (attached), shows the front view of a Y-piece. The Y-piece will be part of the coal-conveying piping at a power station.

Draw, to scale 1:5, each of the following views:

6.1 The given view of the Y-piece by using the common central-sphere method

6.2 The pattern of the plate to make part A of the Y-piece – the joint of the pattern is at X-X

The completed drawing must clearly indicate all construction lines. Print the following title and scale centred beneath the finished drawing:

Y-PIECE
SCALE 1:5 **[20]**

TOTAL: 100

Copyright reserved

DIAGRAM SHEET 1

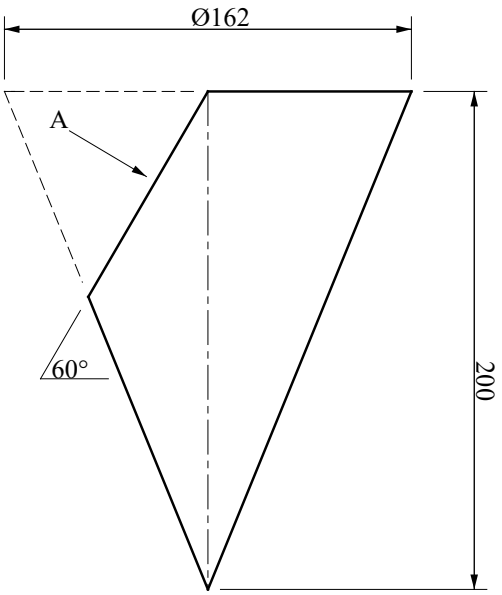

FIGURE 1

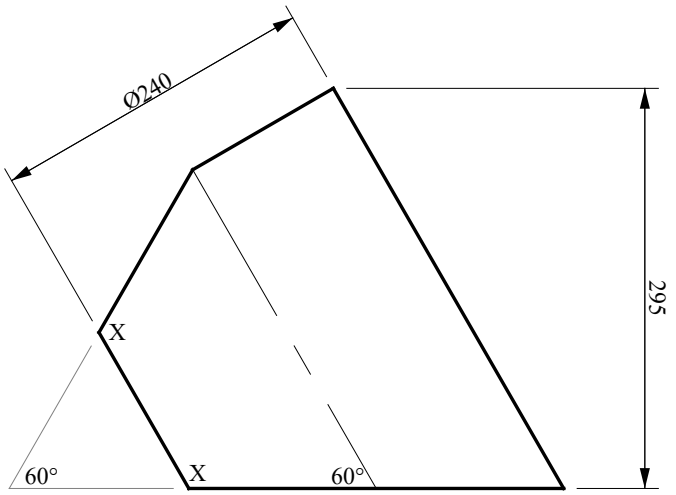

FIGURE 2

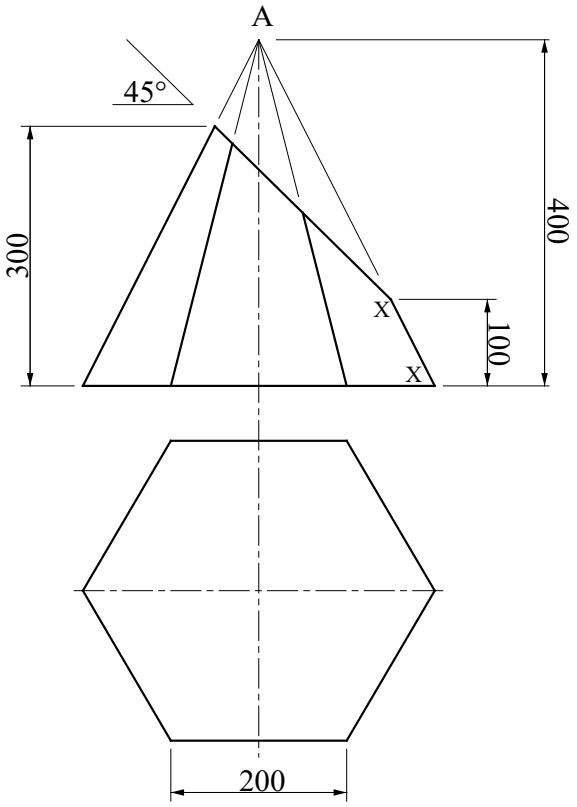

FIGURE 3

DIAGRAM SHEET 2

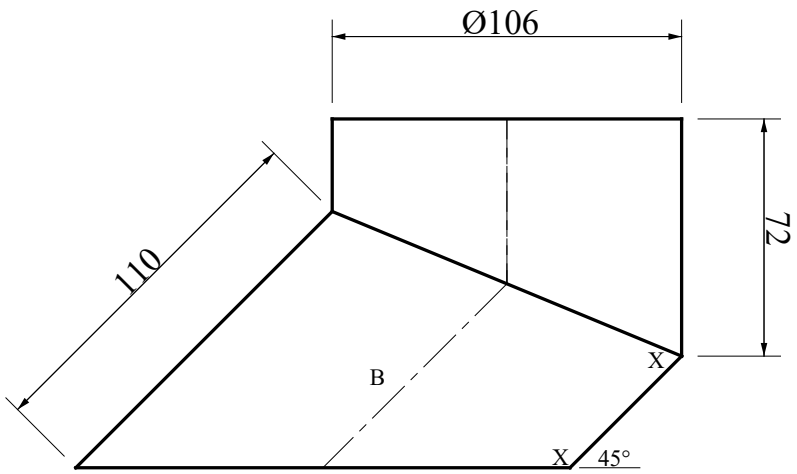

FIGURE 4

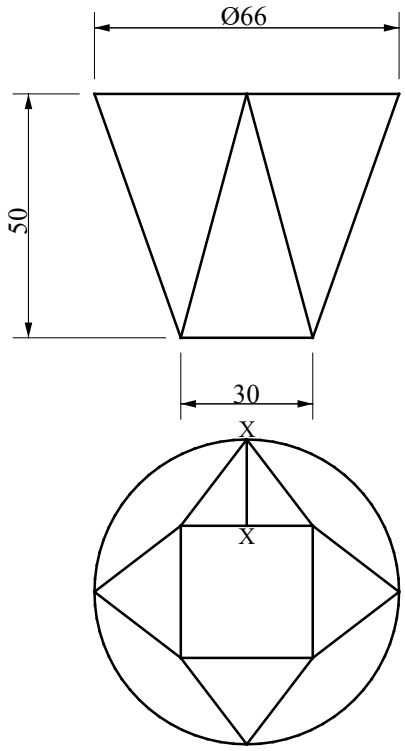

FIGURE 5

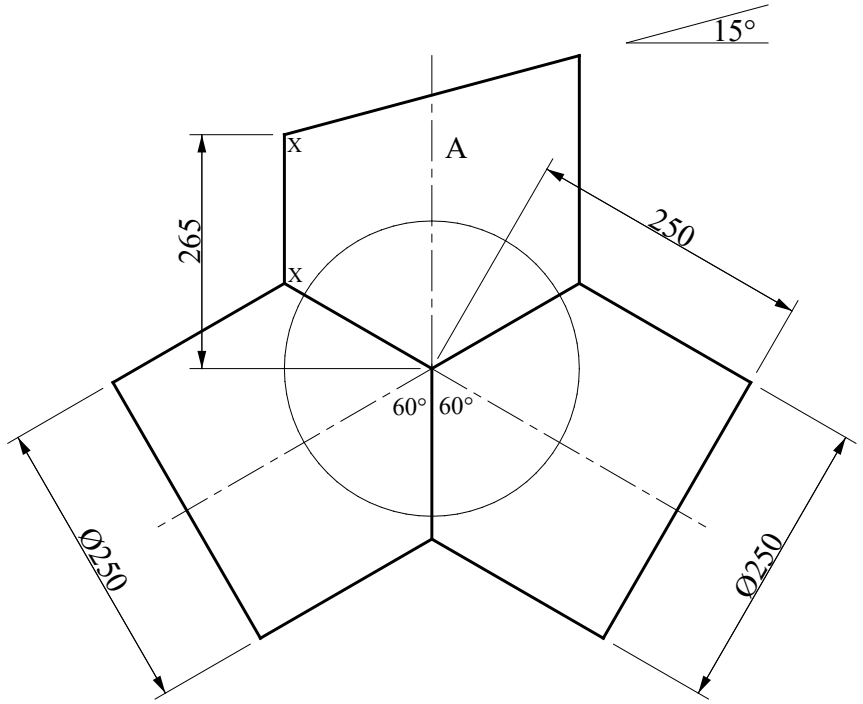

FIGURE 6

Copyright reserved