higher education & training

Department:
Higher Education and Training
REPUBLIC OF SOUTH AFRICA

MARKING GUIDELINE

NATIONAL CERTIFICATE

PLATING AND STRUCTURAL STEEL DRAWING N1

1 April 2020

This marking guideline consists of 9 pages.

Copyright reserved

QUESTION 1: CONE

	MARK
Front view	2
Top view	3
True view on arrow A	6
Symbol	1
Scale	1
Accuracy	1
Neatness	1
TOTAL:	**15**

QUESTION 2: RIGHT PIPE

	MARK
Given view	5
Pattern	7
Scale	1
Accuracy	1
Neatness	1
TOTAL:	**15**

QUESTION 3: TRUNCATED HEXAGONAL PYRAMID

	MARK
Front view	2
Completed top view	4
Pattern	6
Scale	1
Accuracy	1
Neatness	1
TOTAL:	**15**

QUESTION 4: PIPE ELBOW

	MARK
Front view	5
Pattern of part B of the elbow	7
Scale	1
Accuracy	1
Neatness	1
TOTAL:	**15**

Copyright reserved

QUESTION 5: SQUARE-TO-ROUND

	MARK
Front view	2
Top view	5
Pattern	10
Scale	1
Accuracy	1
Neatness	1
TOTAL:	**20**

QUESTION 6: Y-PIECE

	MARK
Front view without line of interpenetration	5
Line of interpenetration	3
Pattern of pipe A	9
Scale	1
Accuracy	1
Neatness	1
TOTAL:	**20**

Copyright reserved

QUESTION 1

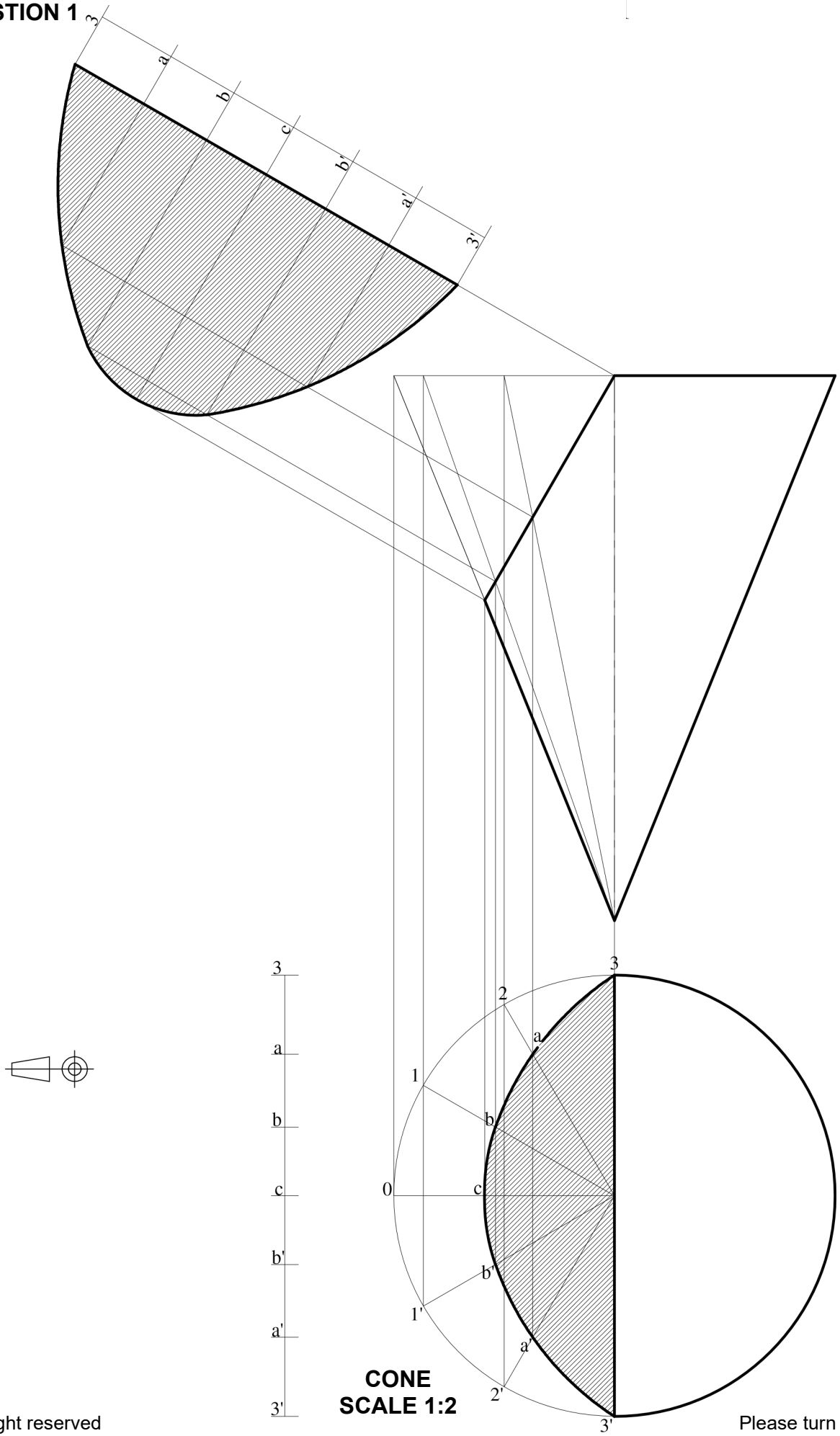

CONE
SCALE 1:2

[15]

QUESTION 2

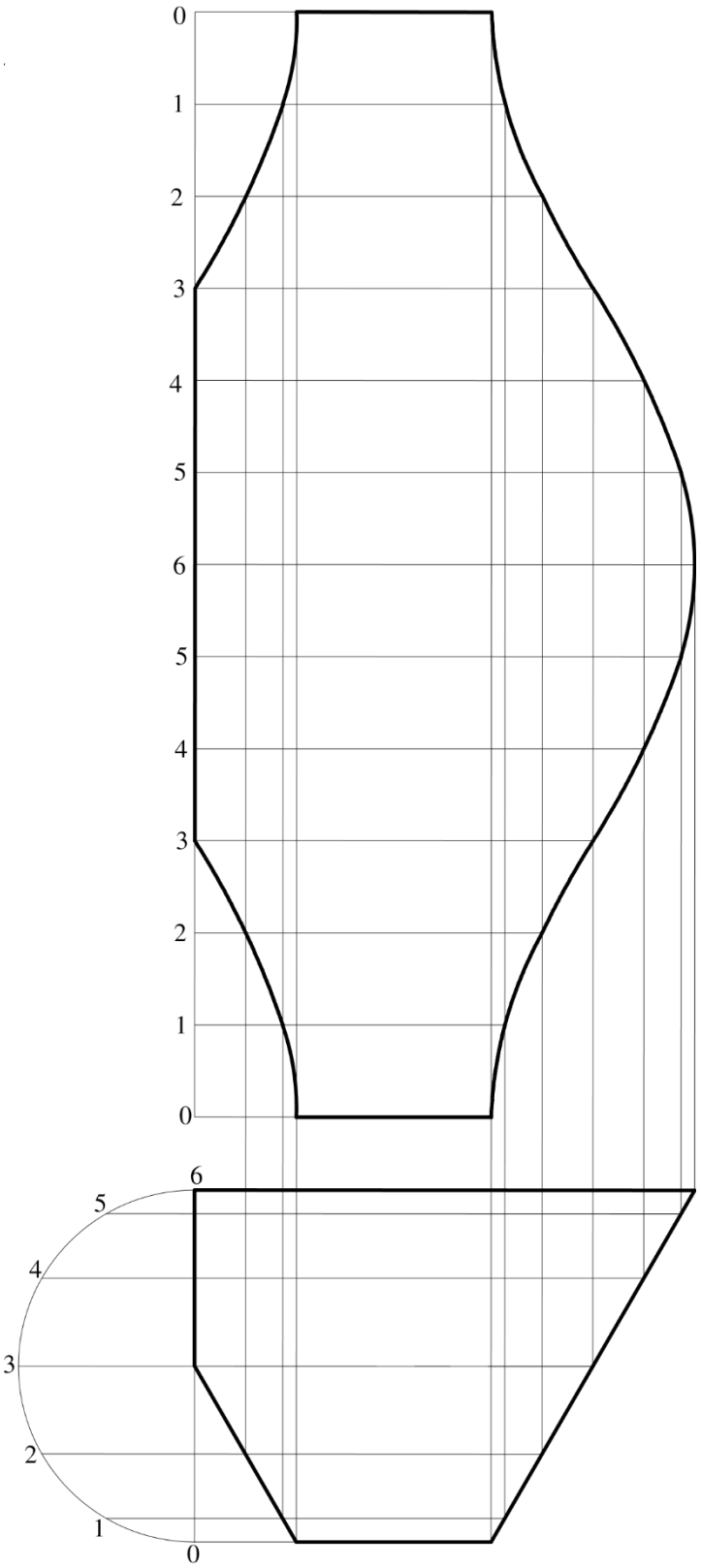

RIGHT PIPE
SCALE 1:5 **[15]**

QUESTION 3

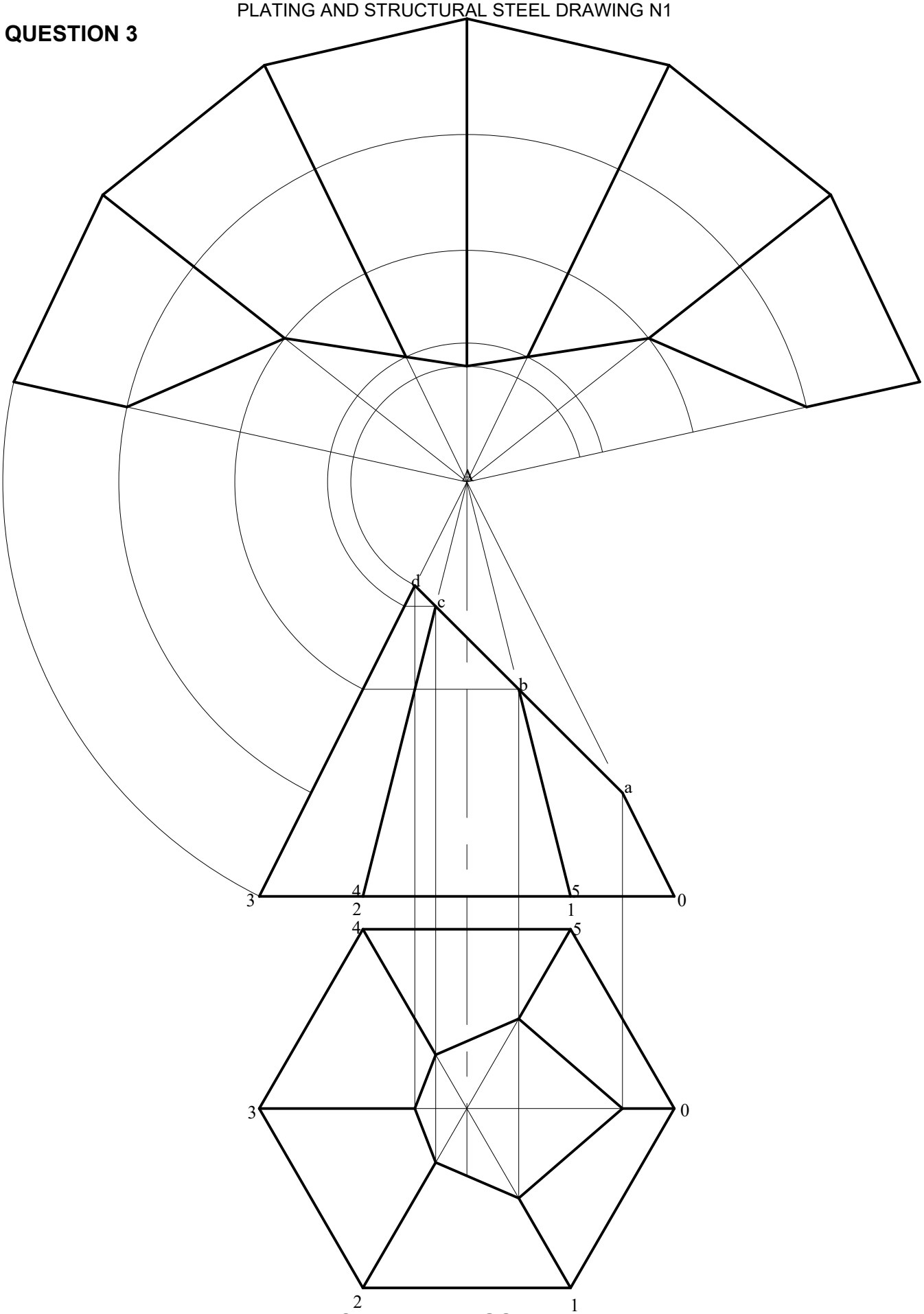

TRUNCATED HEXAGONAL PYRAMID
SCALE 1:5 **[15]**

QUESTION 4

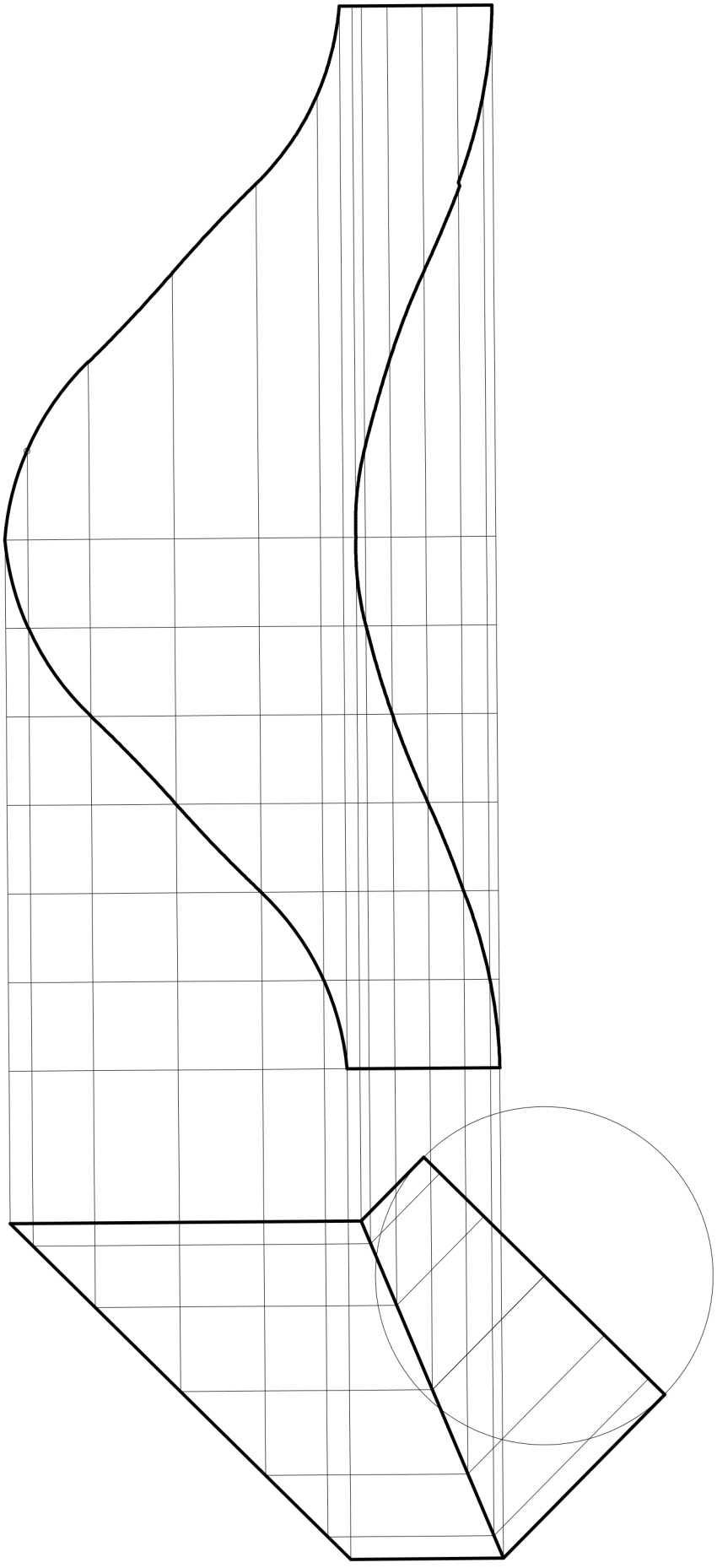

PIPE ELBOW
SCALE 1:2

[15]

QUESTION 5

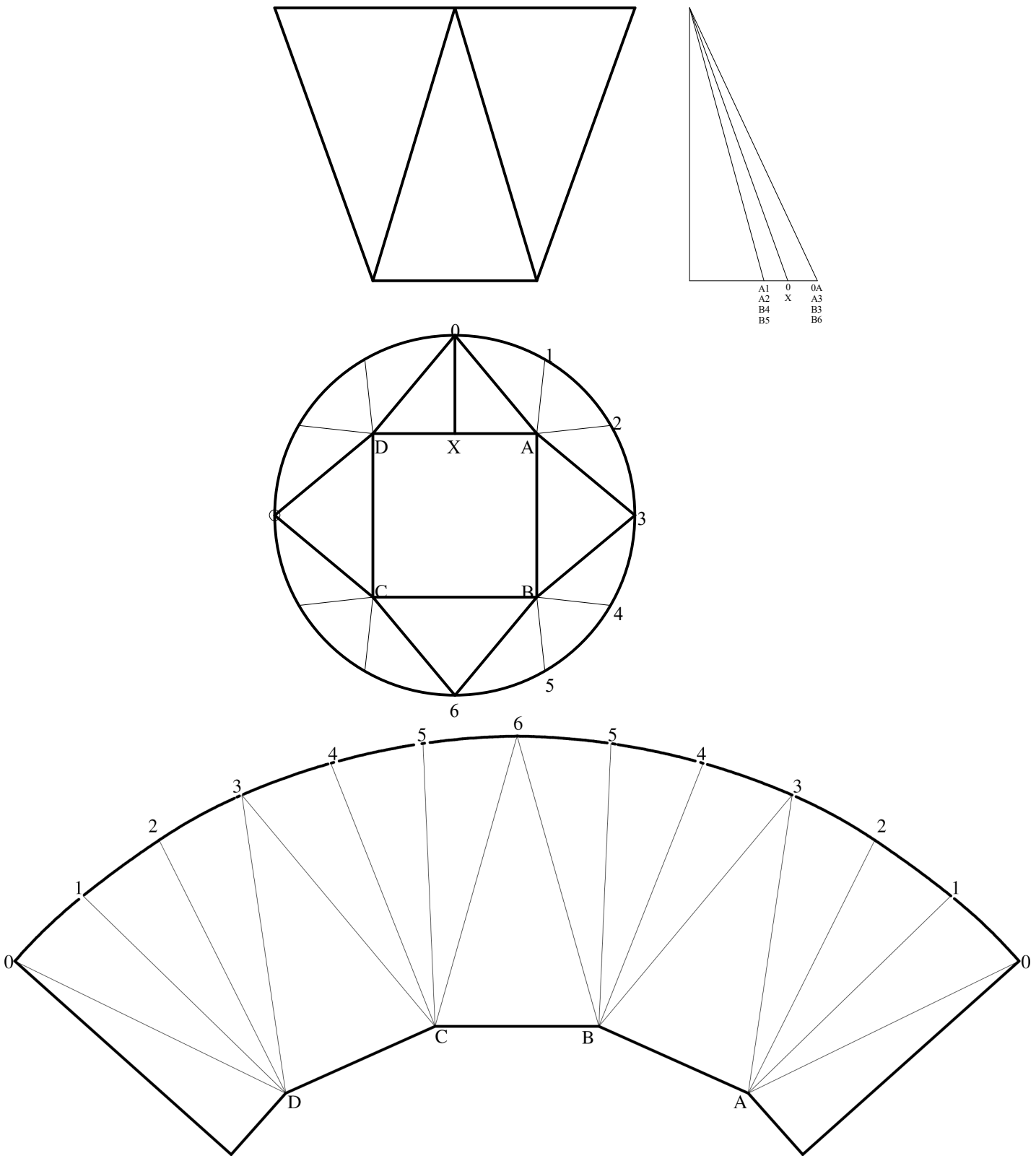

SQUARE-TO-ROUND
SCALE 1:1 **[20]**

QUESTION 6

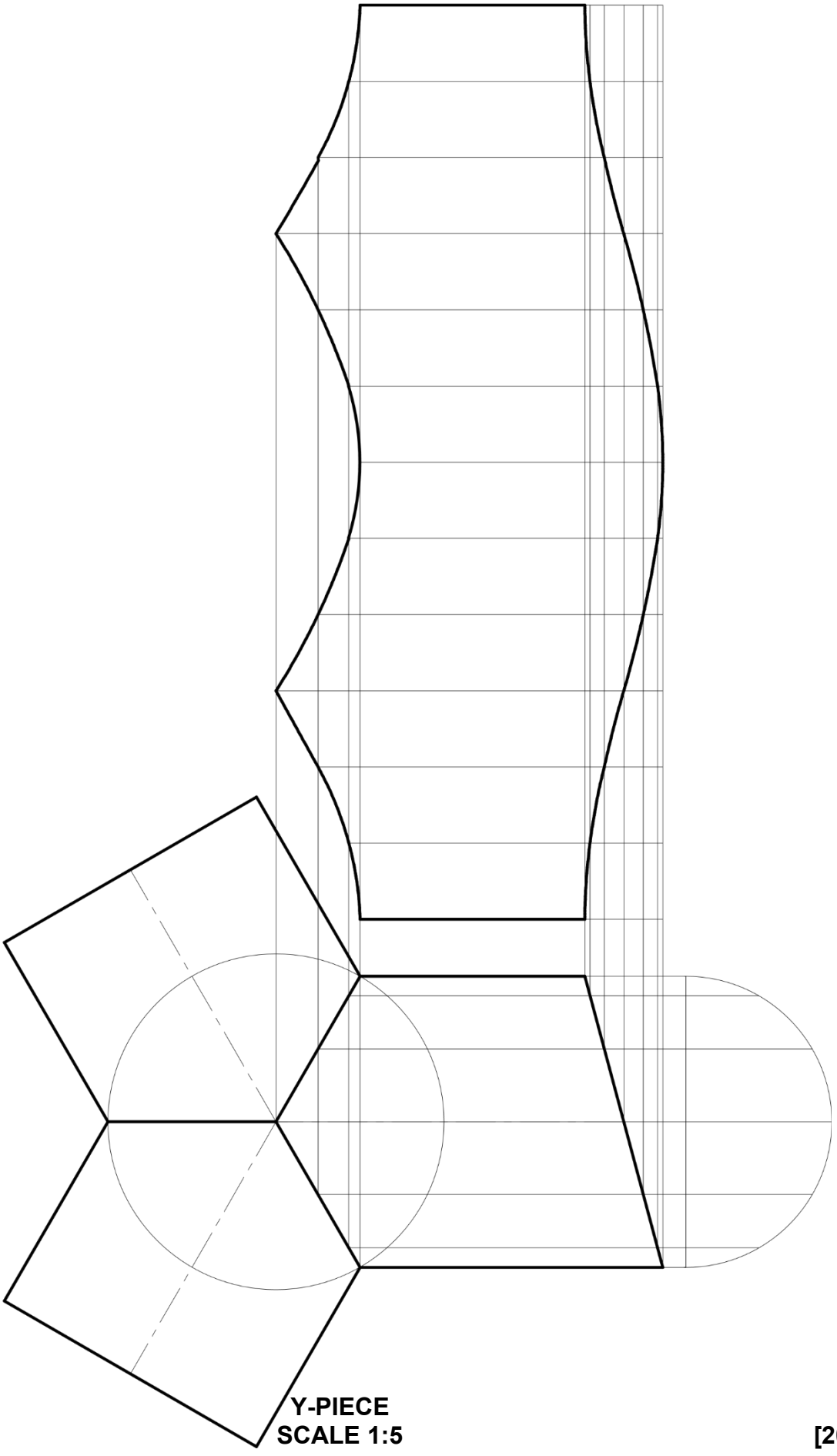

Y-PIECE
SCALE 1:5 **[20]**

TOTAL: 100

Copyright reserved