higher education & training

Department:
Higher Education and Training
REPUBLIC OF SOUTH AFRICA

T1330**(E)**(M29)T

NATIONAL CERTIFICATE

PLATING AND STRUCTURAL STEEL DRAWING N1

(8090091)

29 March 2019 (X-Paper)
09:00–13:00

REQUIREMENTS: ONE A2 drawing sheet

Calculators may be used.

This question paper consists of 5 pages and 2 diagram sheets.

Copyright reserved

DEPARTMENT OF HIGHER EDUCATION AND TRAINING
REPUBLIC OF SOUTH AFRICA

NATIONAL CERTIFICATE
PLATING AND STRUCTURAL STEEL DRAWING N1
TIME: 4 HOURS
MARKS: 100

INSTRUCTIONS AND INFORMATION

1. Answer ALL the questions.
2. Read ALL the questions carefully.
3. Number the answers according to the numbering system used in this question paper.
4. Show ALL construction lines.
5. Add ALL dimensions and descriptions unless stated otherwise.
6. Marks will be allocated for neatness.
7. Use only ONE A2 DRAWING SHEET.
8. Draw on both sides of the A2 DRAWING SHEET.
9. Draw a 15 mm wide border line on both sides of the A2 DRAWING SHEET.
10. Work neatly.

Copyright reserved

QUESTION 1

FIGURE 1, DIAGRAM SHEET 1 (attached), shows the front view of a truncated pyramid with a 60° cut and an incomplete top view drawn in first-angle orthographic projection. The pyramid will be used as a model in a drawing class at a TVET college. Draw, to scale 1:1, the following views:

1.1 The given front view of the truncated pyramid

1.2 The complete top view of the truncated pyramid

1.3 The true shape of the cut in the direction of arrow A

Use a symbol to indicate the projection.

Clearly indicate the construction lines on the completed drawing. Print the following title and scale centred beneath the completed drawing:

TRUNCATED PYRAMID
SCALE 1:1 **[15]**

QUESTION 2

FIGURE 2, DIAGRAM SHEET 1 (attached), shows the front view of a connection of a right pipe to an oblique pipe forming an elbow. The connection is part of the ducting in a ventilation system in a welding workshop.

Draw, to scale 1:2, the following views:

2.1 The given front view of the connection of the right pipe to an oblique pipe

2.2 The pattern of the plate to make the oblique pipe – the joint of the pattern must be at X-X

Clearly indicate the construction lines on the completed drawing. Print the following title and scale centred beneath the completed drawing:

OBLIQUE PIPE ELBOW
SCALE 1:2 **[15]**

Copyright reserved

QUESTION 3

FIGURE 3, DIAGRAM SHEET 1 (attached), show TWO views of an oblique T-piece consisting of TWO unequal-diameter right pipes. The T-piece is part of the piping on a dust-extraction plant.

Draw, to scale 1:2, the following views:

3.1 TWO given views of the T-piece

3.2 The construction of the line of penetration between the main pipe and the branch pipe

3.3 The pattern of the plate to manufacture the branch pipe – the joint of the branch pipe must be at X-X

3.4 The shape of the hole in the main pipe

Clearly indicate the construction lines on the completed drawing. Print the following title and scale centred beneath the completed drawing:

OBLIQUE T-PIECE
SCALE 1:2 **[20]**

QUESTION 4

FIGURE 4, DIAGRAM SHEET 2 (attached), shows the front view and an incomplete top view of a truncated hexagonal pyramid. The pyramid will be used as a model in a metalwork class at a technical high school.

Draw, to scale 1:1, the following views:

4.1 The given front view of the hexagonal pyramid

4.2 The complete top view of the hexagonal pyramid

4.3 The pattern of the plate to make the hexagonal pyramid – the joint of the pattern must be at X-X

Clearly indicate the construction lines on the completed drawing. Print the following title and scale centred beneath the completed drawing:

TRUNCATED HEXAGONAL PYRAMID
SCALE 1:1 **[15]**

Copyright reserved

QUESTION 5

FIGURE 5, DIAGRAM SHEET 2 (attached), shows the intersection between a right pipe and a right cone by using the common central sphere method. The intersection will be used as part of an air-conditioning system in an office.

Draw, to scale 1:10, the following views:

5.1 The given view of the intersection piece

5.2 The construction of the line of penetration between the right pipe and the right cone

5.3 The pattern of the plate to manufacture the right cone – the joint of the pattern must be at X-X

Clearly indicate the construction lines on the completed drawing. Print the following title and scale centred beneath the completed drawing:

CONE INTERSECTION
SCALE 1:10 **[15]**

QUESTION 6

FIGURE 6, DIAGRAM SHEET 2 (attached), shows TWO views of a square-to-rectangle transition piece. The transition piece will be fitted on a machine in a shoe-manufacturing factory.

Draw, to scale 1:5, the following views:

6.1 The TWO given views of the transition piece

6.2 The pattern of the plate to make the transition piece – the joint of the pattern must be at X-Y

Clearly indicate the construction lines on the completed drawing. Print the following title and scale centred beneath the completed drawing:

SQUARE-TO-RECTANGLE TRANSITION PIECE
SCALE 1:5 **[20]**

TOTAL: 100

Copyright reserved

DIAGRAM SHEET 1

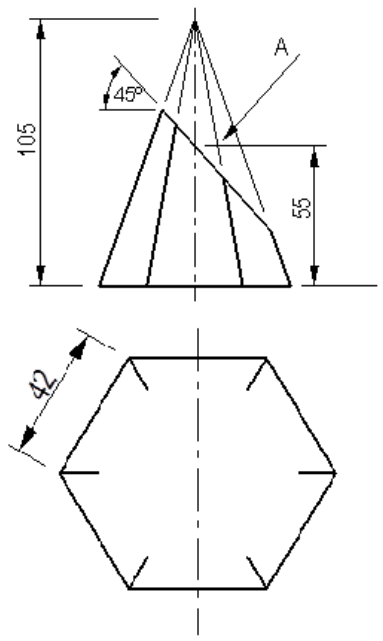

FIGURE 1

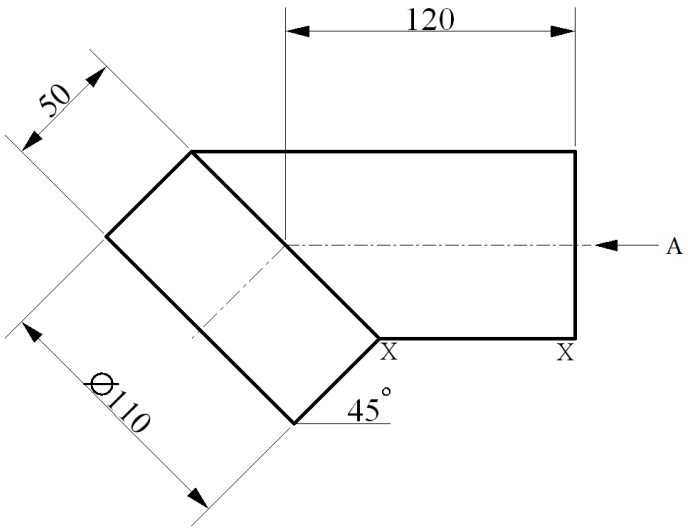

FIGURE 2

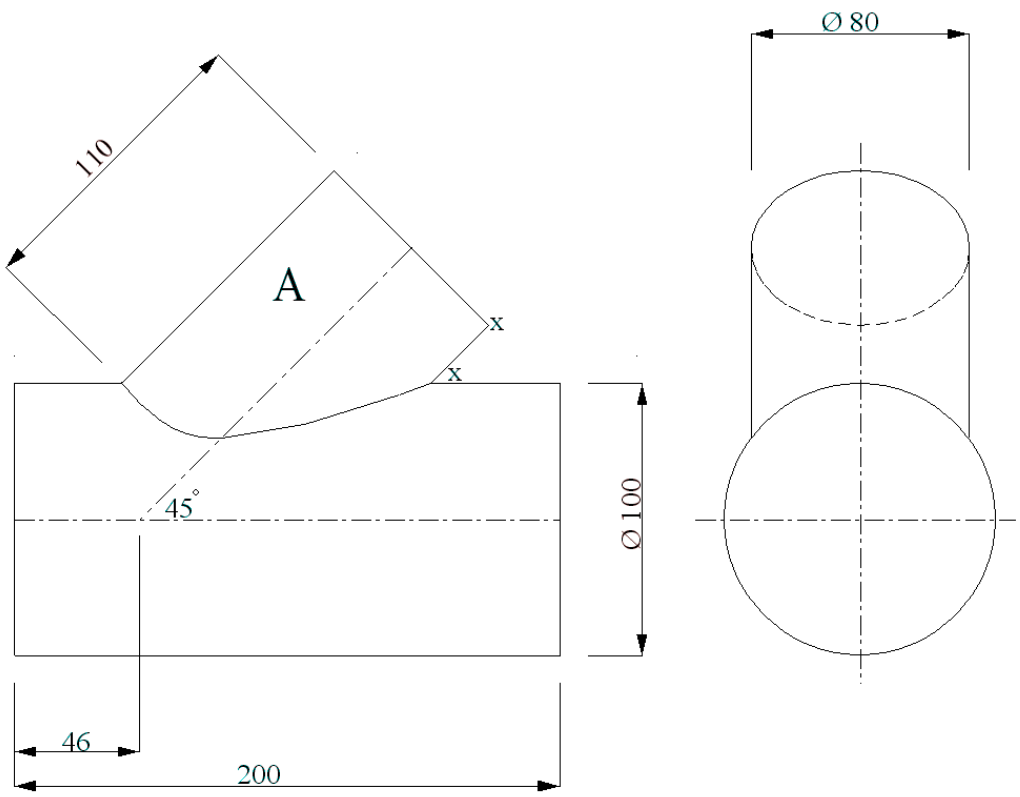

FIGURE 3

DIAGRAM SHEET 2

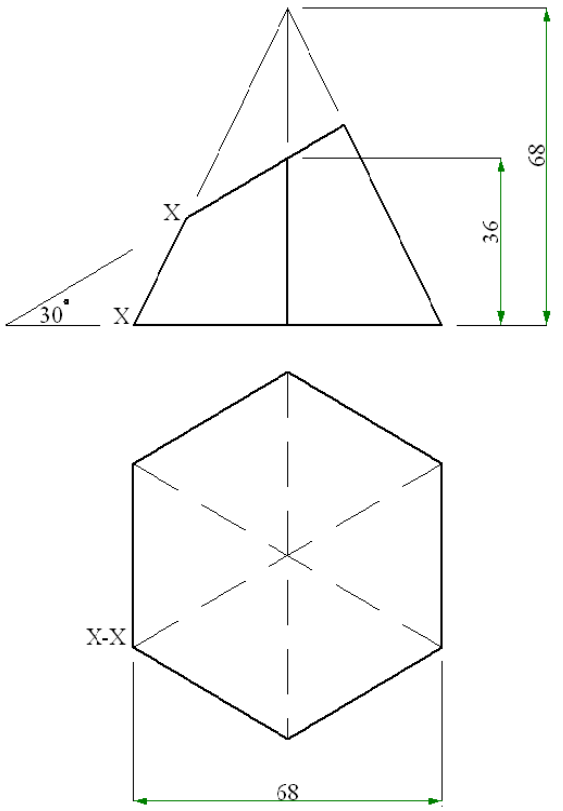

FIGURE 4

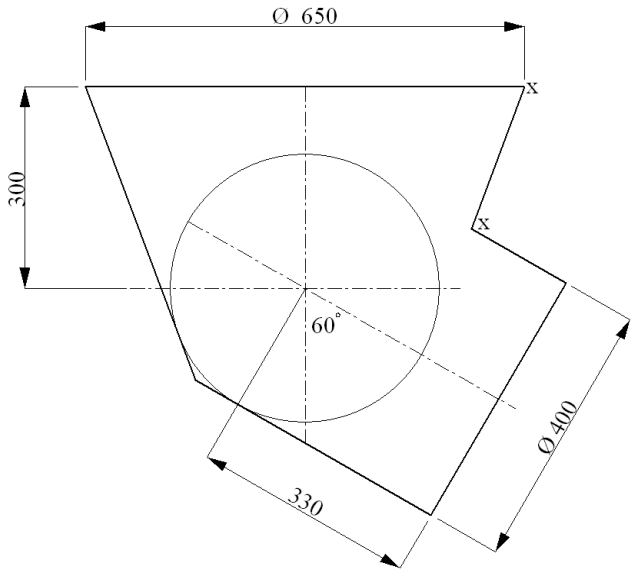

FIGURE 5

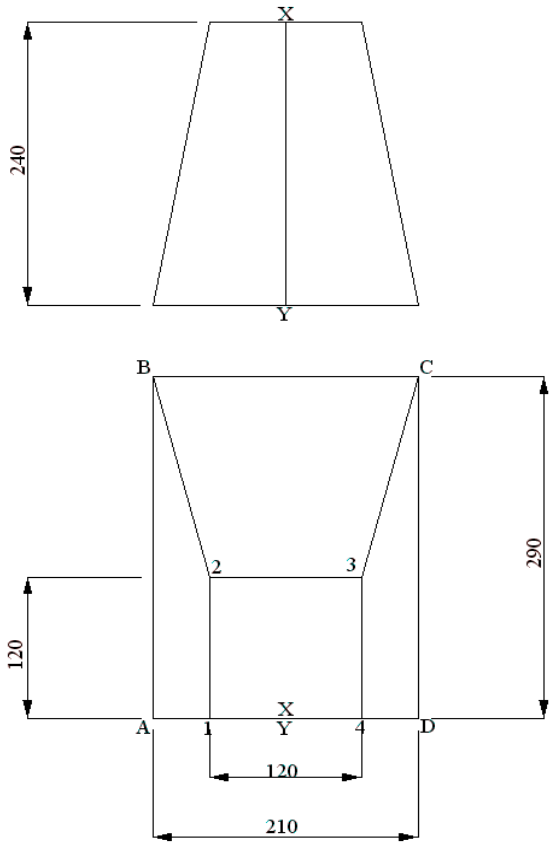

FIGURE 6

Copyright reserved