higher education & training

Department:
Higher Education and Training
REPUBLIC OF SOUTH AFRICA

T1330**(E)**(M28)T

NATIONAL CERTIFICATE

PLATING AND STRUCTURAL STEEL DRAWING N1

(8090091)

28 March 2018 (X-Paper)
09:00–13:00

REQUIREMENTS: **A2 drawing sheet**

Calculators may be used.

This question paper consists of 5 pages and 2 diagram sheets.

Copyright reserved

DEPARTMENT OF HIGHER EDUCATION AND TRAINING
REPUBLIC OF SOUTH AFRICA

NATIONAL CERTIFICATE
PLATING AND STRUCTURAL STEEL DRAWING N1
TIME: 4 HOURS
MARKS: 100

INSTRUCTIONS AND INFORMATION

1. Answer ALL the questions.
2. Read ALL the questions carefully.
3. Number the answers according to the numbering system used in this question paper.
4. ALL the construction lines MUST be shown.
5. Add ALL the dimensions and descriptions unless otherwise stated.
6. Only ONE drawing sheet may be used.
7. Draw on both sides of the drawing sheet.
8. A 15 mm wide border line must be drawn on both sides of the drawing sheet.
9. Work neatly.

Copyright reserved

QUESTION 1

FIGURE 1, DIAGRAM SHEET 1, shows an oblique cone joined by a 60 mm diameter pipe at the top end and a 20 mm diameter pipe at the bottom end. The oblique cone and the pipes are part of the exhaust system of a motorcycle.

Draw to scale 1 : 1 the following views:

1.1 The given view of the oblique cone with the pipes

1.2 The pattern of the plate to manufacture the oblique cone
The joint of the pattern must be at X–X.

All the construction lines must be clearly indicated on the completed drawing. Print the following title and scale centrally below the completed drawing:

OBLIQUE CONE
SCALE 1 : 1 **[15]**

QUESTION 2

FIGURE 2, DIAGRAM SHEET 1, shows the front view and top view of a square prism with a 30° cut, drawn in first-angle orthographic projection. The prism will be used as a model for drawing classes at a TVET college.

Draw to scale 1 : 2 the following views:

2.1 The front view of the square prism

2.2 The top view of the square prism

2.3 A left view of the square prism

2.4 The true shape of the cut as shown in the direction of arrow 'A'

Use the symbol to indicate the projection.

The completed drawings must clearly indicate all the construction lines. The following title and scale must be printed centrally below the finished drawing:

SQUARE PRISM
SCALE 1 : 2 **[15]**

Copyright reserved

QUESTION 3

FIGURE 3, DIAGRAM SHEET 1, shows a 230 mm diameter right pipe cut at both ends. The pipe will be used as part of the ducting in the ventilation system of a shopping complex.

Draw to scale 1 : 5 the following views:

3.1 The given view of the right pipe

3.2 The pattern of the plate to manufacture the pipe
The joint of the pipe is at X–X.

All the construction lines must be clearly indicated on the completed drawing. Print the following title and scale centrally below the completed drawing:

RIGHT PIPE
SCALE 1 : 5 **[15]**

QUESTION 4

FIGURE 4, DIAGRAM SHEET 2, shows a front view and an incomplete top view of a truncated hexagonal pyramid. The pyramid will be used as feet, to support a small stainless steel tank in a dairy.

Draw to scale 1 : 1 the following views:

4.1 The TWO given views of the pyramid

4.2 The completed top view of the pyramid

4.3 The pattern of the plate to manufacture the truncated hexagonal pyramid
Use the radial line method to develop the pattern.
The joint of the pattern must be at X–X.

All the construction lines must be clearly indicated on the completed drawing. Print the following title and scale centrally below the completed drawing:

TRUNCATED HEXAGONAL PYRAMID
SCALE 1 : 1 **[15]**

Copyright reserved

QUESTION 5

FIGURE 5, DIAGRAM SHEET 2, shows TWO views of a T-piece, consisting of a square main pipe and a circular branch pipe. The T-piece is part of a fitting on a machine in a clothing factory.

Draw to scale 1 : 5 the following views:

5.1 The TWO given views of the T-piece

5.2 The construction of the line of penetration between the square main pipe and the circular branch pipe

5.3 The pattern of the plate to manufacture the circular branch pipe
The joint of the pattern must be at X–X.

5.4 The shape of the hole in the square main pipe

The completed drawings must clearly indicate all the construction lines. The following title and scale must be printed centrally below the finished drawing:

T-PIECE
SCALE 1 : 5 **[20]**

QUESTION 6

FIGURE 6, DIAGRAM SHEET 2, shows two views of a rectangle-to-rectangle transition piece that will be fitted on a machine in a shoe manufacturing factory.

Draw to scale 1 : 2 the following views:

6.1 The TWO given views of the transition piece

6.2 The pattern of the plate to manufacture the rectangle-to-rectangle transition piece
The joint of the pattern must be at X–X.

All the construction lines must be clearly indicated on the completed drawing. Print the following title and scale centrally below the completed drawing:

RECTANGLE-TO-RECTANGLE
SCALE 1 : 2 **[20]**

TOTAL: 100

Copyright reserved

DIAGRAM SHEET 1

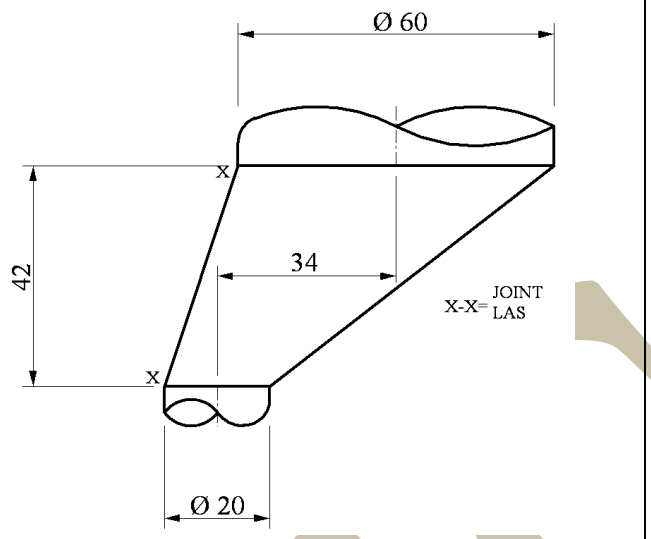

FIGURE 1

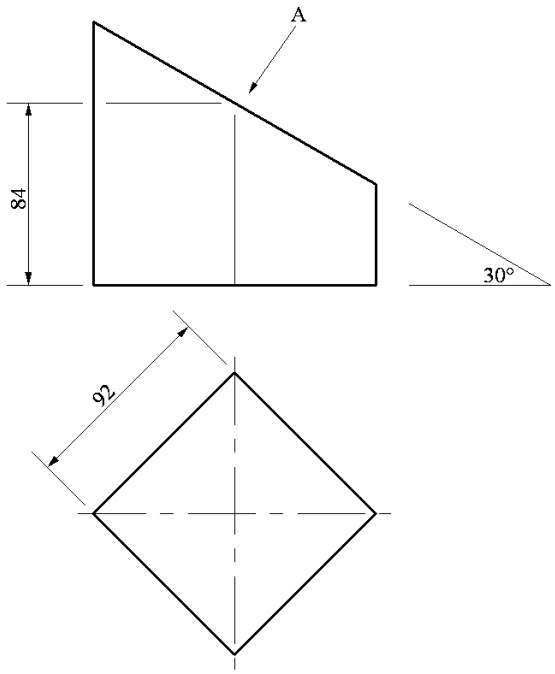

FIGURE 2

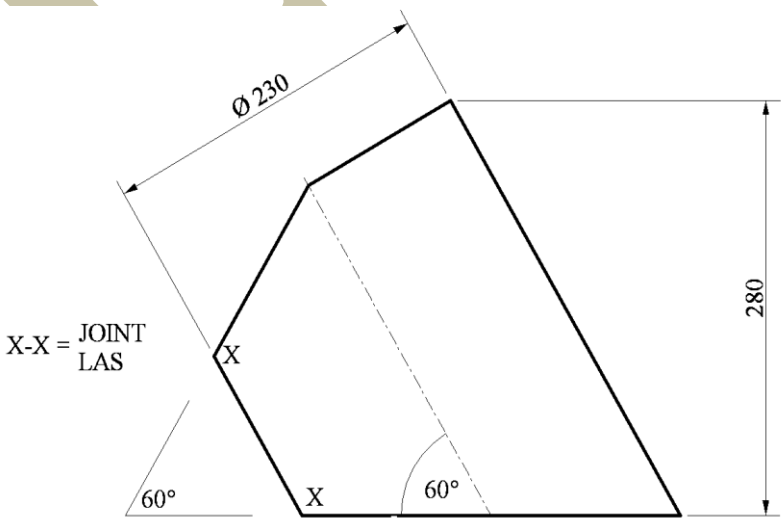

FIGURE 3

Copyright reserved

DIAGRAM SHEET 2

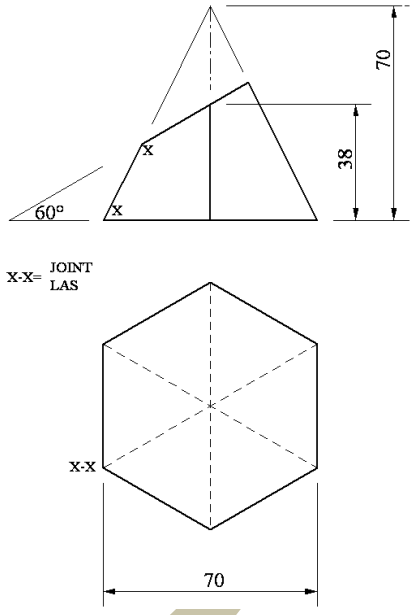

FIGURE 4

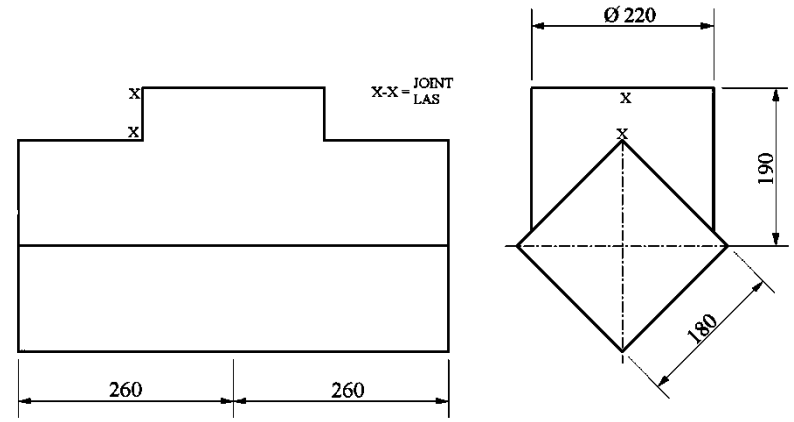

FIGURE 5

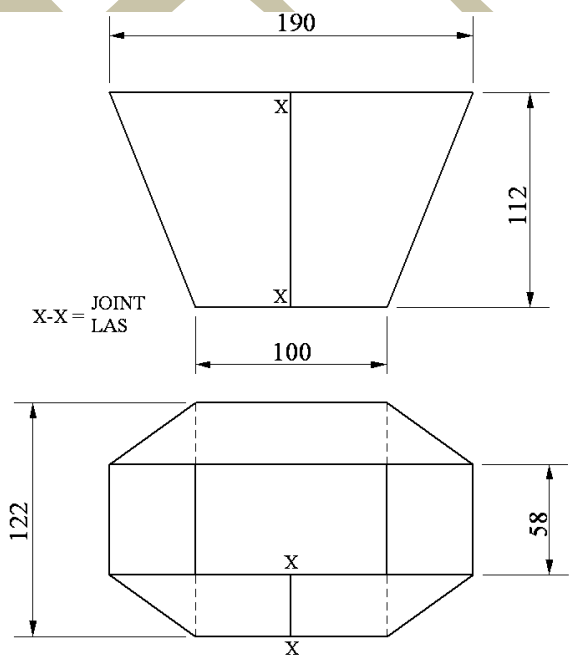

FIGURE 6

Copyright reserved