higher education & training

Department:
Higher Education and Training
REPUBLIC OF SOUTH AFRICA

MARKING GUIDELINE

NATIONAL CERTIFICATE

PLATING AND STRUCTURAL STEEL DRAWING N1

28 MARCH 2018

This marking guideline consists of 10 pages.

Copyright reserved

MARKSHEET

QUESTION 1: OBLIQUE CONE

Front view	5
Development	7
Scale	1
Accuracy	1
Neatness	1
Total	**15**

QUESTION 2: SQUARE PRISM

Front view	2
Top view	2
Left view	3
True shape of the view on arrow A	4
Symbol	1
Scale	1
Accuracy	1
Neatness	1
Total	**15**

QUESTION 3: RIGHT PIPE

Front view	5
Development	7
Scale	1
Accuracy	1
Neatness	1
Total	**15**

QUESTION 4: TRUNCATED HEXAGONAL PYRAMID

Front View	2
Top View	3
Development	7
Scale	1
Accuracy	1
Neatness	1
Total	**15**

Copyright reserved

QUESTION 5: T-PIECE

Front view	2
Left view	2
Line of penetration	3
Shape of hole in square main pipe	3
Pattern of circular branch pipe	7
Scale	1
Accuracy	1
Neatness	1
Total	**20**

QUESTION 6: RECTANGLE-TO-RECTANGLE

Front view	2
Top view	3
Development	12
Scale	1
Accuracy	1
Neatness	1
Total	**20**

TOTAL: 100

Copyright reserved

QUESTION 1

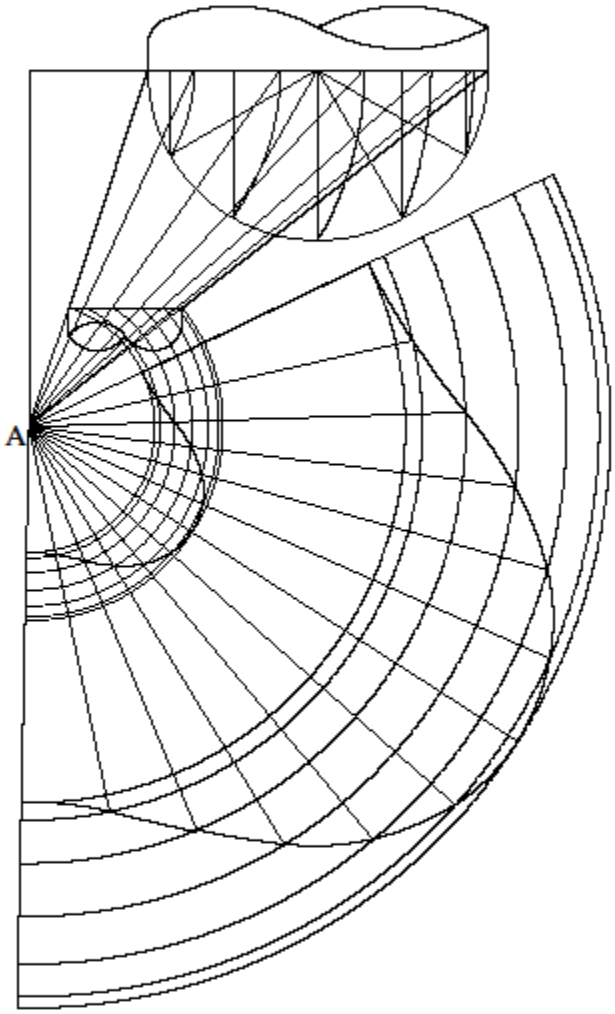

OBLIQUE CONE
SCALE = 1:1

P3-2016

QUESTION 2

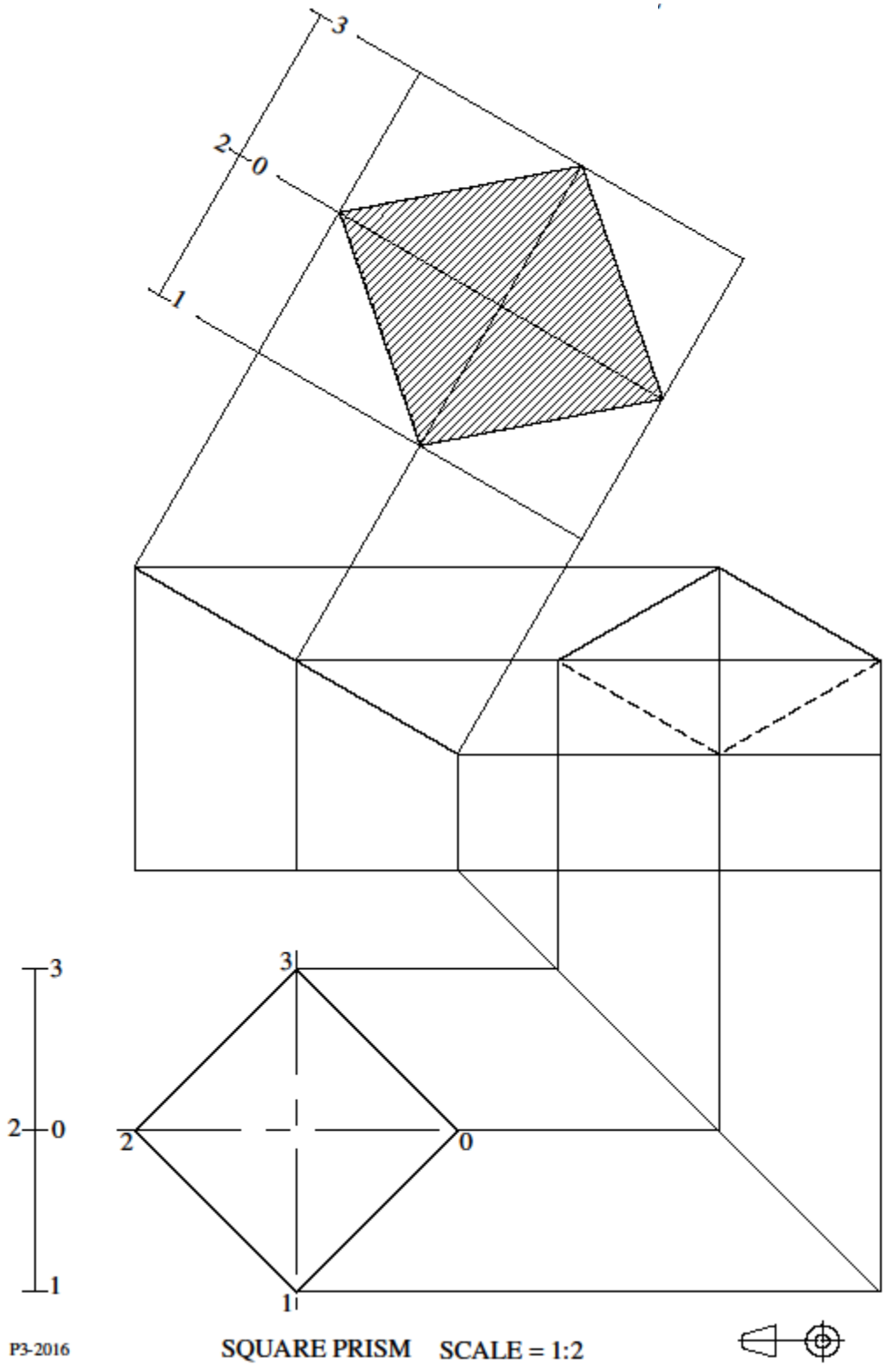

QUESTION 3

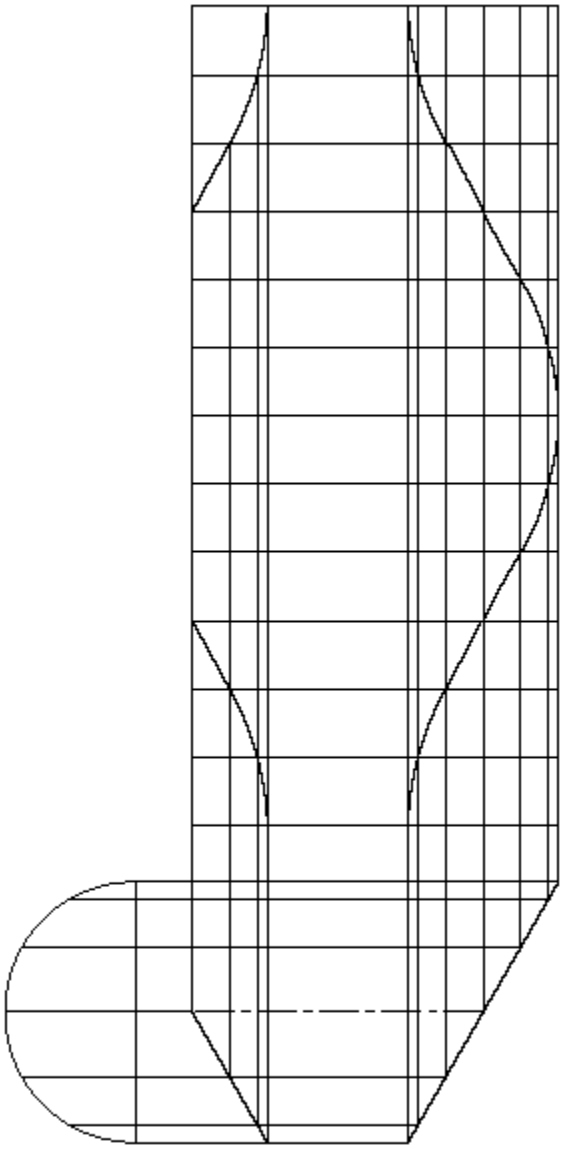

RIGHT PIPE
SCALE = 1:5

P3-2016

QUESTION 4

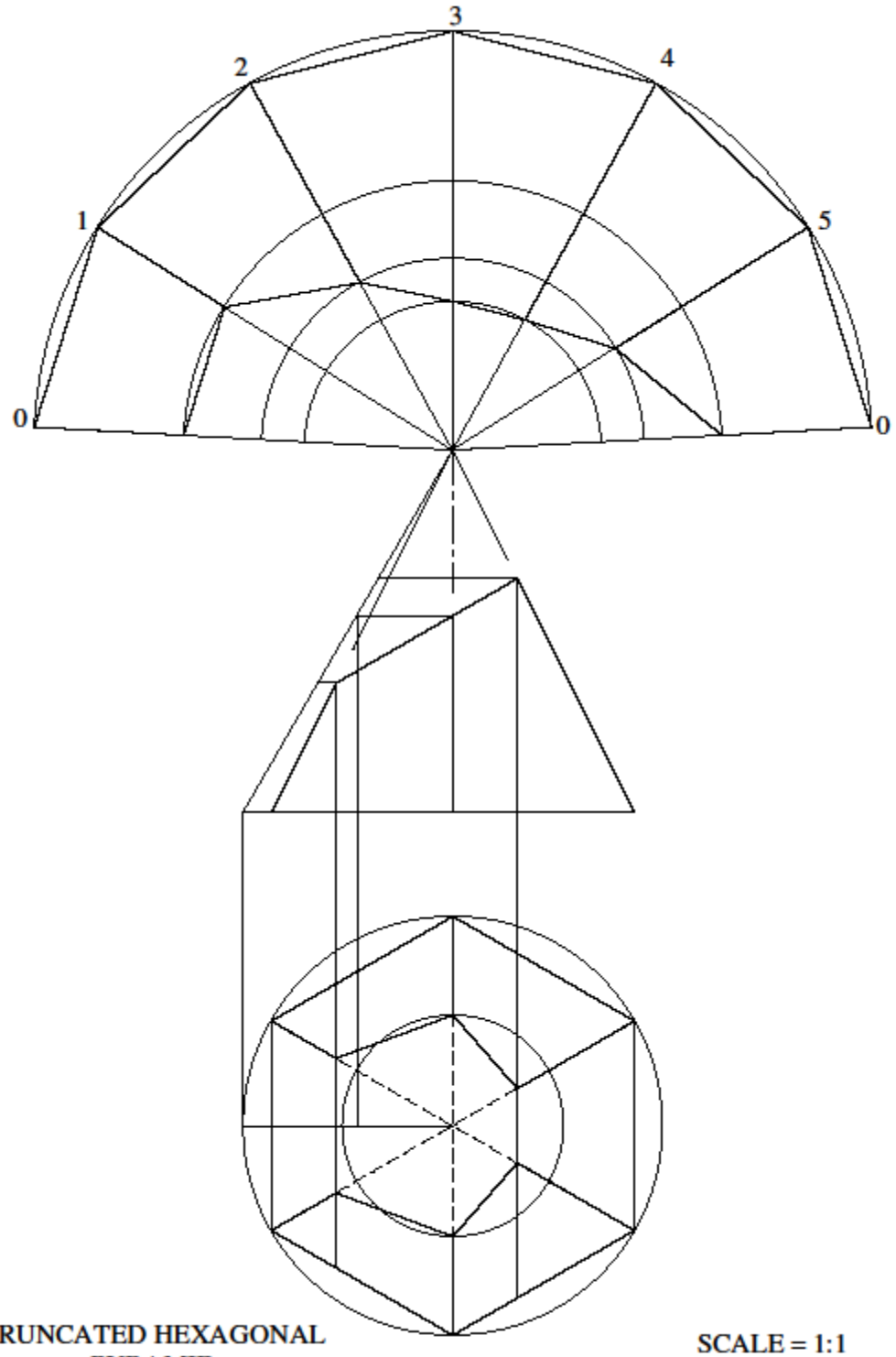

TRUNCATED HEXAGONAL PYRAMID

SCALE = 1:1

QUESTION 5

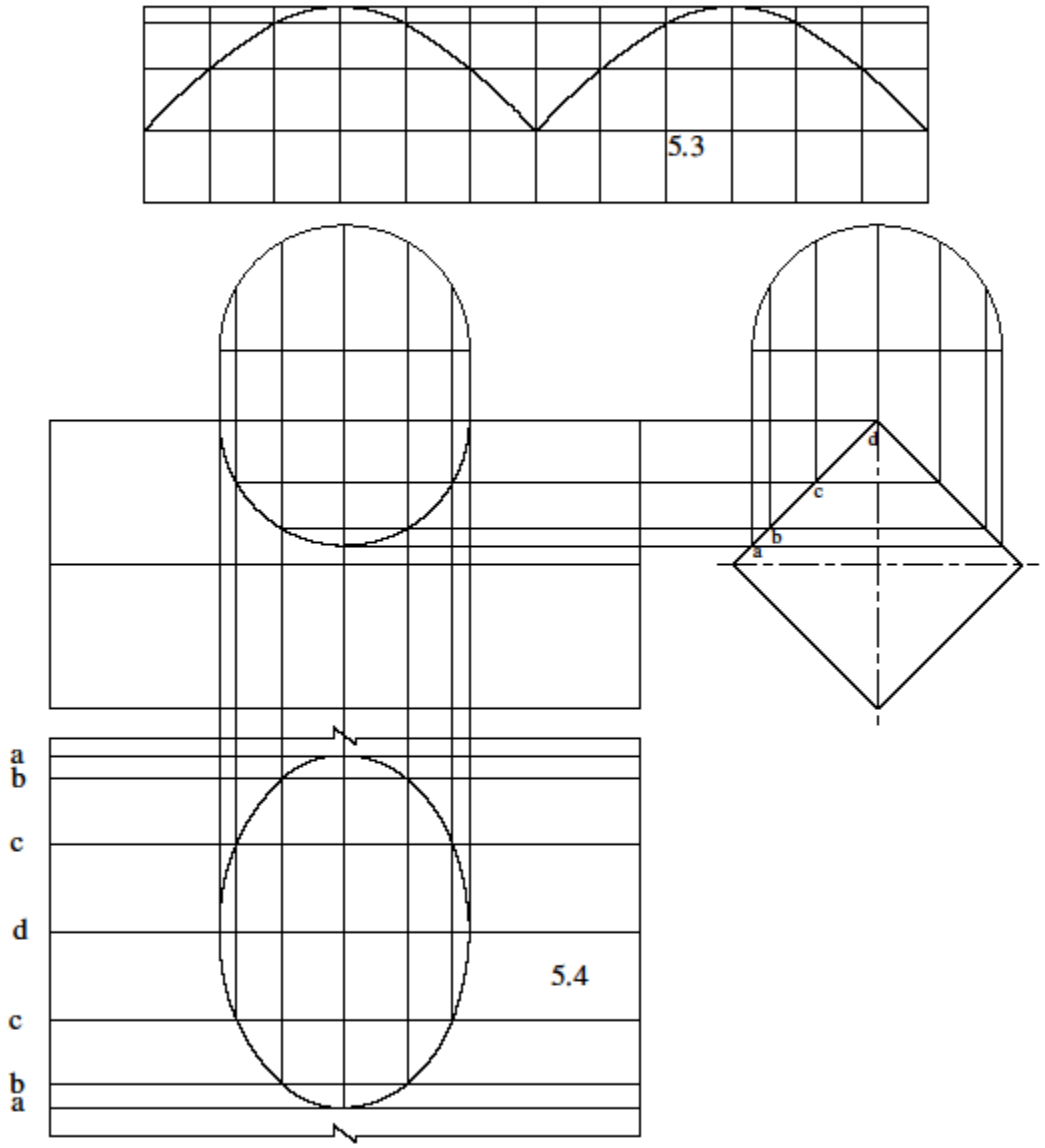

T- PIECE
SCALE = 1:5

P3-2016

QUESTION 6

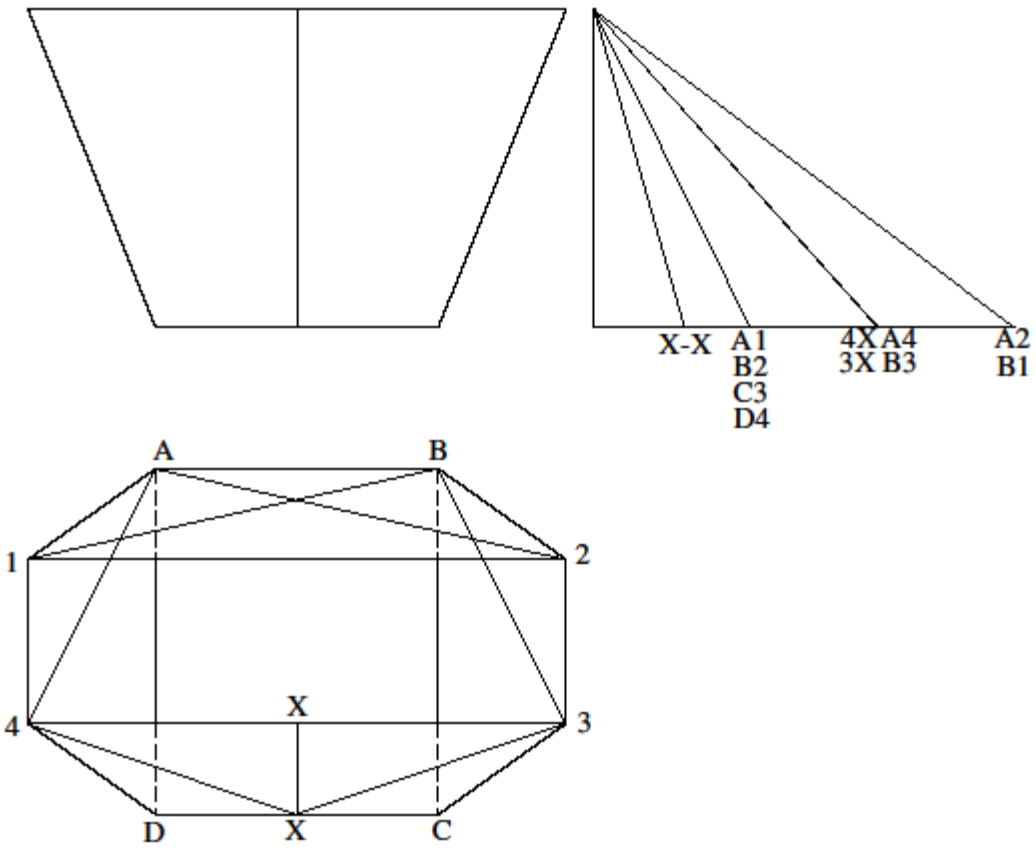

RECTANGLE TO RECTANGLE

SCALE = 1:2

QUESTION 6

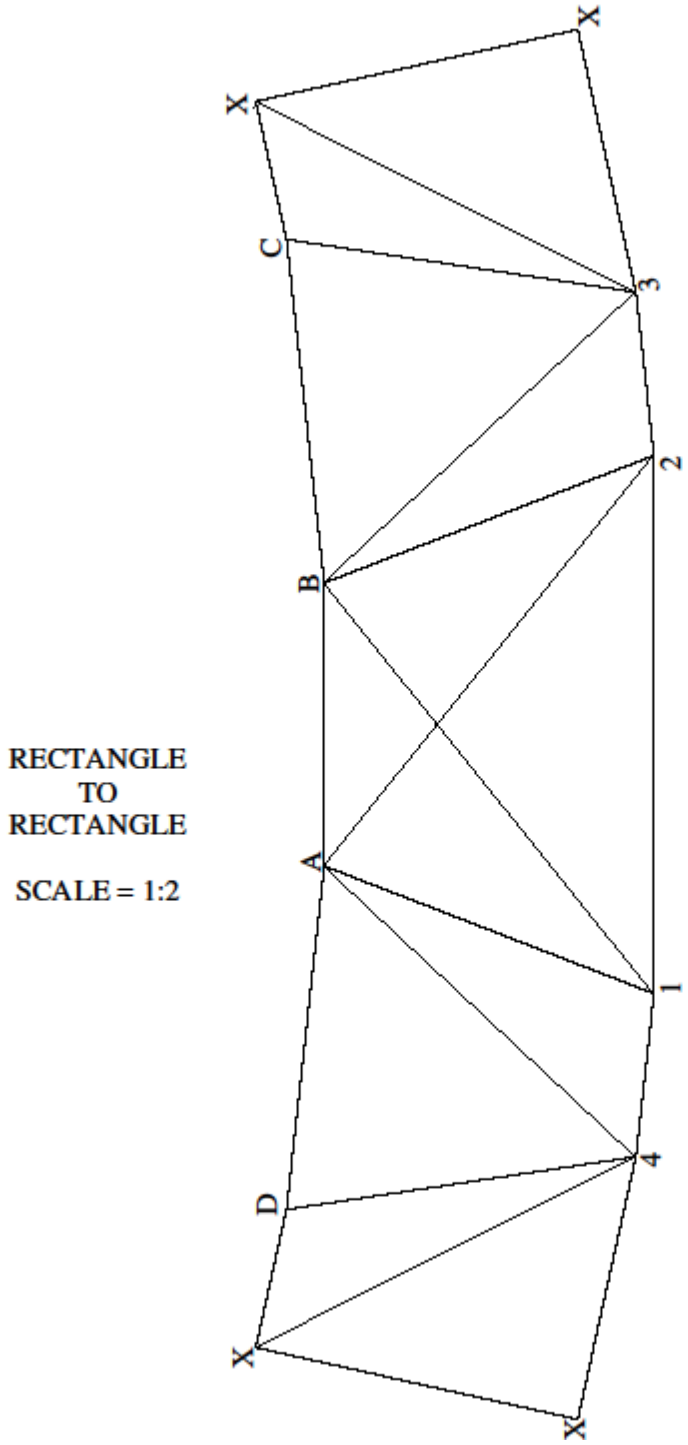

RECTANGLE
TO
RECTANGLE

SCALE = 1:2

Copyright reserved